About TRICORE

Established : Aug, 1985

Employee : 2,250 persons

Headquarter : Taichung City, Taiwan

China Plant A : Guangdong, 24,000 m^2

China Plant B : Guangdong, 67,000 m^2

TRICORE ensures to provide customers with high quality and excellent performing products while producing diverse manufactures. Dedicating ourselves in offering custom-made services to meet customers' demands, over 3,000 customized models of our products have been exported to over fifty countries around the world to serve in industries such as medical, automobile, surveillance, RC, IT, digital camera, and security in the past three decades.
To meet different developing requirements, TRICORE established Two R&D centers in Taiwan and China. Our R&D team consists of well trained professionals who possess the practical experiences in their specialized fields that allow them to pursue excellence in innovating technology. TRICORE has obtained a wide range of patents, which has allowed us to keep the key know-how to become one of the world's leading companies in the core components manufacturing industry.

Customized Services

TRICORE is one of the leading companies in micro motors and modules. With 35 years of experience of making a wide range of products. We provide customized products with a high level of vertical integration from designing to manufacturing. The fast service for every step of the way is our promise to customers. To ensure quality control, up to 85% of the parts are made in-house. This strategy also benefits and adds value by shortening the lead time to our customers.

TRICORE products have a high reputation in markets such as the automotive, digital camera, health-care, and security system. We've been providing more than 5,000 of our products to over 1,000 customers around the world, including many international and well-known companies.

Consisting of well-trained mechanical and software engineers, TRICORE's PE team is able to develop customized testers to meet the different requirements from customers, and to build in-house production lines. Currently TRICORE is able to deliver over 160 million units of products annually, and our production capacity is continuously growing.

Content

Technical Ability

The micro motors TRICORE develops, strive to achieve high performance levels, quiet technology, miniaturization, and a life-span of products. TRICORE's motors have been characterized as high-precision measurement and analysis equipment. This has allowed TRICORE to play a leading role in many motor industries and become conducive to future analyses and improvement on motor-related products.

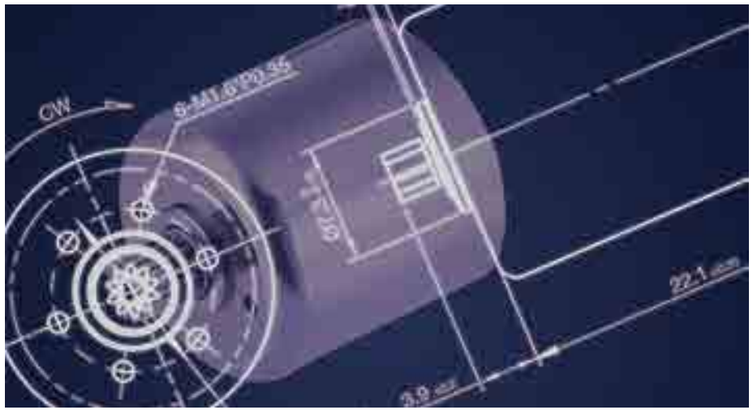

From product conceptualizing, designing, group distributing, testing, and producing, TRICORE has accumulated a wealth of technical experience. With a professional R&D group, we are able to popularize our products into markets within a short period of time. We try our best in administrating and monitoring everything such as our product structures, production processes, and materials to pursue perfection to meet the customer's demands.

TRICORE has been and is dedicated in developing technical production services on shutter modules. Up till now, the structure of shutters has built a solid foundation for performance improvement. In 2008, in accordance to the trend in extended development of molds, TRICORE concentrated on the development of shutter design and committed to uphold the rapid response with low power consumption, and miniscule sizes. We regard low noise while maintaining high quality as a starting point for innovation in our products which have been approved through a number of new forms of applications for patents in Japan, USA and other countries.

Motor Assembly Drawing

To make sure we are producing the best motors we can, 80% of the components in our motors are made by TRICORE itself, which also ensures customers that they are getting the best they can get from us. This also allows flexibility in customizations if needed and allows the customer make specific requests. Within the over 5,000 products we have, 60% of them are customizable. Having automatic machines also brings up the product quality as it maintains better stability, accuracy, and control.

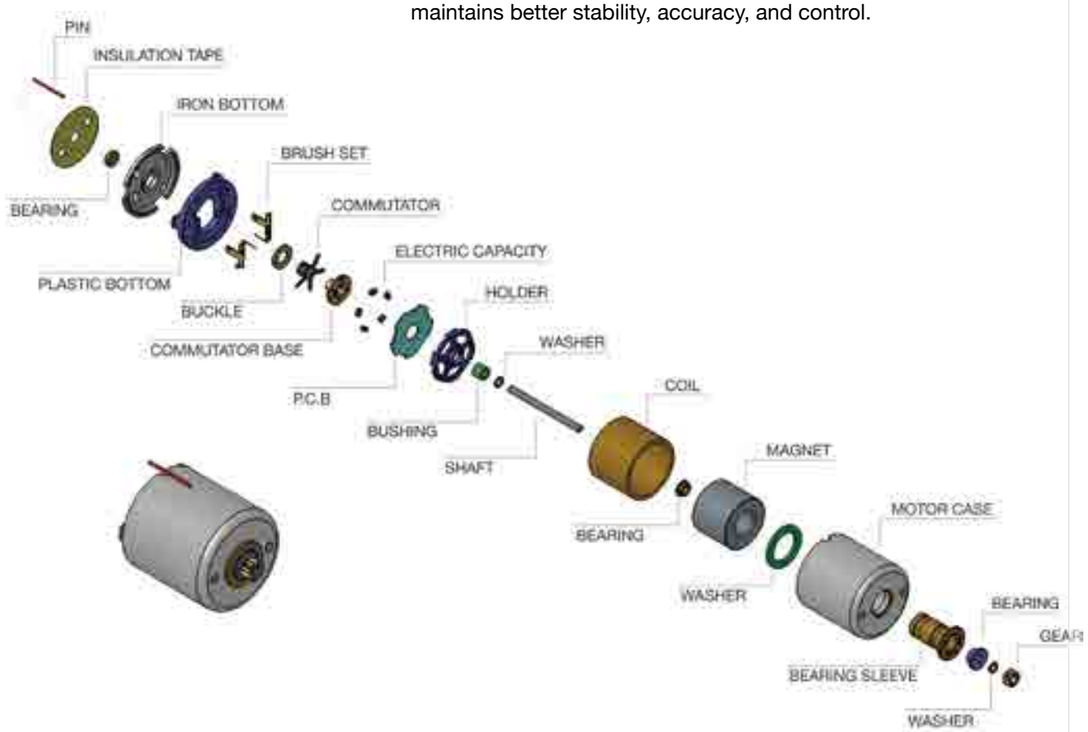

Technology

Motor

A motor is a mechanism that converts one form of energy into mechanical energy. This process is shown below in Figure 1. The main parameters of a motor are voltage (V), current (I), rotational speed (N) and torque (T). The motor quality can be expressed as percentage efficiency (η).

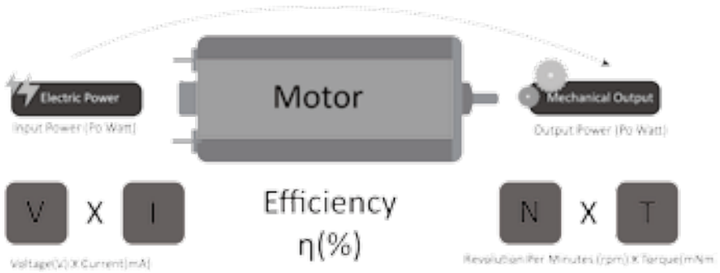

Figure 1. A motor converting electric power into mechanical power.

Motor Characteristic Curve Explanation

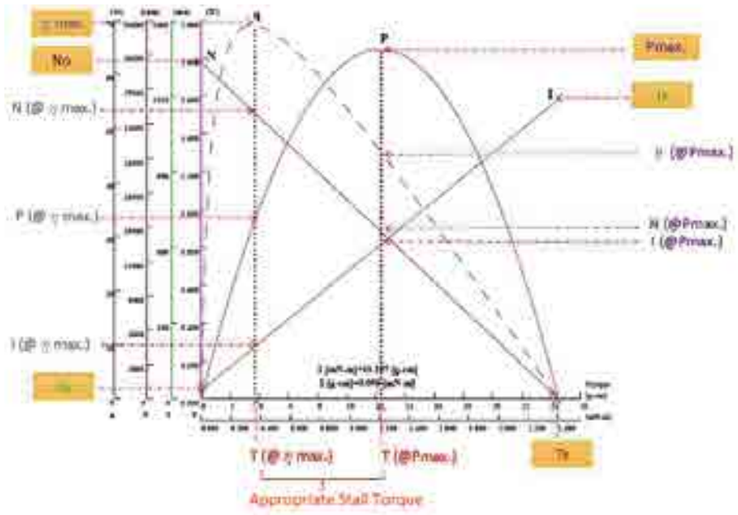

General Data

	Unit	Symbol	Definition	Testing Method
Terminal Resistance	Ω (Ohm)	R	The electric resistance at room temperature across a brush, a commutator or a coiled wire connection.	Ohmmeter
Nominal Voltage	V	V	The DC voltage supplied to the motor while testing for all the other characteristics.	Voltmeter
No Load Speed	RPM	N_o	The speed of an unloaded motor at the nominal voltage.	Tachometer Oscilloscope
No Load Current	mA	I_o	The typical current of an unloaded motor at the nominal voltage.	Ammeter
Stall Torque	mNm	T_s	The torque produced by a stalled motor at the nominal voltage.	Torque meter Calculation formula
Stall Current	A	I_s	The current of a stalled motor at the nominal voltage.	Ammeter Calculation formula
Rated Torque	mNm	T_a	The motor's continuous torque that it can output at rated speed	Utilising: A specific value Costumer determined loaded value.
Rated Speed	RPM	N_a	The speed of a loaded motor at the rated voltage.	Tachometer
Rated Current	mA	I_a	The current of a loaded motor at the rated voltage.	Ammeter
Input Power	Watt	P_I	The electric power input to the motor.	Calculation formula
Output Power	Watt	P_o	The electric power output by the motor.	Calculation formula
Max. Output Power	Watt	P_{max}	The maximum power output by the motor at the nominal voltage.	Calculation formula
Max. Efficiency	%	η_{max}	The ratio of the maximum input power to . Specific value of max.input power and max mechanism power	Calculation formula
Back emf Constant	mV/RPM	KE	The ratio of the motor's generated voltage to the speed of the motor's rotation.	Calculation formula
Constant Torque	mNm/A	KT	The ratio of torque delivered by the motor to the current supplied by it.	Calculation formula

Calculation Method Explanation

1. **Terminal Resistance (R)**
   Unit : Ω
   Formula : $R = V/I_s$

2. **Input Power (P_I)**
   Unit: Watt
   Formula : $P_I = V \times I$ (I unit : A)

3. **Output Power (P_o)**
   Unit: Watt
   Formula : $P_o = (1/9550) \times T \times N$ (T unit: mNm)
   $= (1/97500) \times T \times N$ (T unit: g-cm)

4. **Max. Output Power (P_{max})**
   Unit : Watt
   Formula : Pmax = (R / 4) / (V / R -Io / 1000)2

5. **Efficiency (η)**
   Unit : %
   Formula : η =(Po / PI) x 100%

6. **Max. Output**
   Unit : %
   Formula : ηmax= (1-(Io × R / V))2

7. **No-load Speed (N_o)**
   Unit: RPM
   Formula : No = (V-Io x R) / KE

8. **Stall Torque (T_s)**
   Unit : mNm
   Formula : Ts = (Is -Io) x KT

9. **Back emf Constant (KE)**
   Unit : mV /RPM
   Formula : KE = (2 x π / 60) × KT

Technology

ICR Driving (Design) Principle

IR-CUT Component Assembling

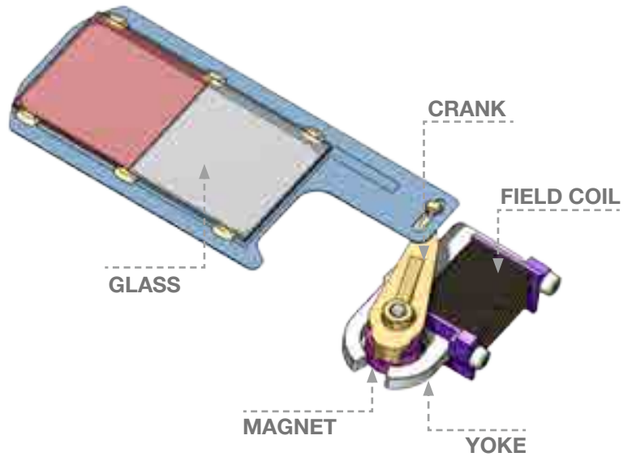

IR-CUT Driving Principle

When the coil is powered on, the magnetic field across the coil will cause the magnet to interact with the other magnetic component (yoke). This will cause the rotor magnet stay in place or keep the torque in static. When the coil is powered on, the magnetic field across the coil will cause the magnet to interact with the other magnetic component (yoke) and cause the magnet to drive the rotor. This then causes the crank to swing the same amount and the filter on shutter will move over covering the lens.

Magneto-Static Field

Magnet and conductive magnet interaction

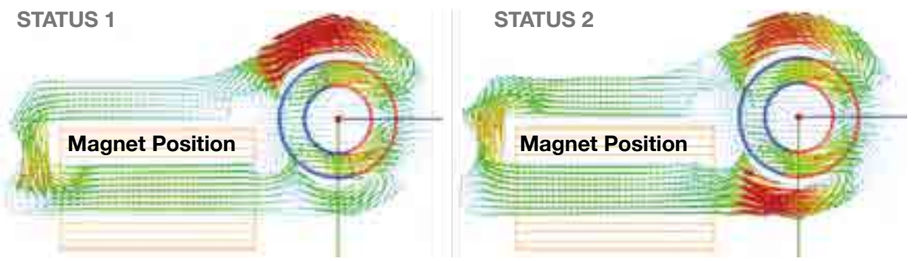

Magnetic Circuit Analysis and Simulating Curve

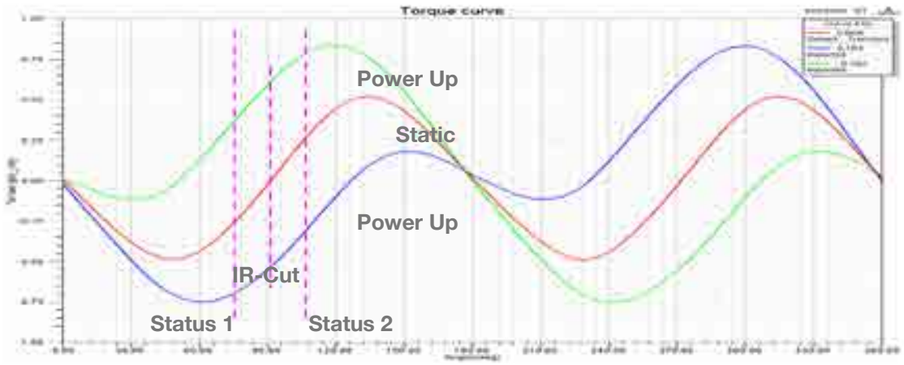

IRIS Driving (Design) Principle

Theory:

An Iris has 2 coils. One is a driving coil, and the other one is a damping coil.

A-B: The driving coil is powered up.
B-C: The driving coil and the damping coil are controlled by PWM to open the blades of the aperture.
C-D: Fully open.
F-G: The driving coil and the damping coil are controlled by PWM to close the blades.

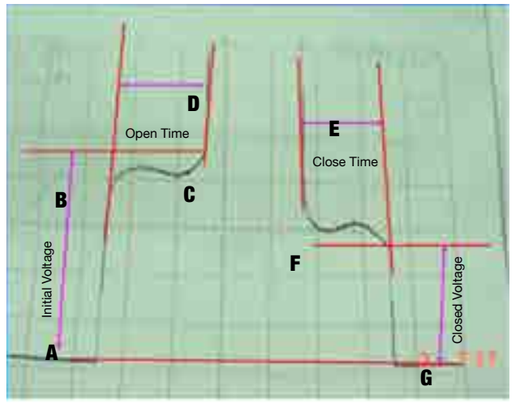

X AXIS: Time
Y AXIS: Voltage

Ripple

Due to the rough surfaces between the blades, the higher surface friction produces the ripple seen on the graph, which can also be observed on an oscilloscope. Furthermore, these ripples can be reduced by lowering the friction between the blades.

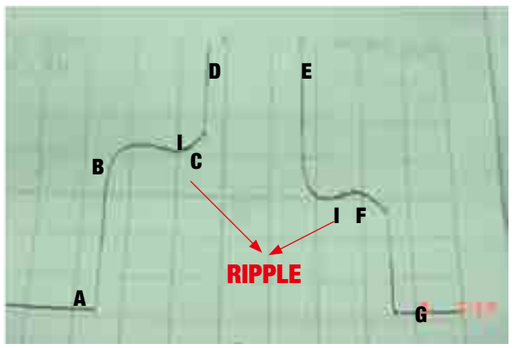

X AXIS: Time
Y AXIS: Voltage

Catalog Key

#1 Sale Type | 1= Bonding
| 2= Non-Bonding

#2 Primary Category | 1= Finished product
| 2= Semi-Finished Product

DC MOTOR

#3		#4		#5		#6-7		#8-9		#10-12	
Type	Code	Type	Code	Type	Code						
Brush	B	Round	R	Axial	A						
Carbon Brush	C	Flat	F	Tray	T						
		Coreless	C	Waving	W						
		Vibrating	V	Pinion Gear	G	Diameter	##	Length	##	Serial Number	###
		Pump Motor	P	Metal Gear Box	M						
		Coreless with Encorder	E	Plastic Gear Box	P						
				Others	O						

BRUSHLESS MOTOR

#3		#4		#5		#6-7		#8-9		#10-12	
Type	Code	Type	Code	Type	Code						
Inner	I	With Hall Sensor and Slot	G	Axial	A						
Outter	O	Hall Sensor	H	Tray	T						
		Without Hall Sensor and Slot	N	Ring	R						
		Slot	M	Metal Gear Box	M	Diameter	##	Length	##	Serial Number	###
		Pump	P	Plastic Gear Box	P						
		Hydroelectric Power	W	Pinion Gear	G						
				Turn table	T						
				Others	O						

Catalog Key

STEPPING MOTOR

#3		#4		#5		#6-7		#8-9		#10-12	
Type	**Code**	**Type**	**Code**	**Type**	**Code**						
Stepping Motor	S	Round	R	Axial	A						
		Flat	F	Bracket	B						
				Pinion Gear	G						
				Leadscrew	L	Diameter	##	Length	##	Serial Number	###
				Metal Gear Box	M						
				Plastic Gear Box	P						
				Others	O						

GEAR MOTOR

#3		#4		#5		#6-7		#8-9		#10-12	
Type	**Code**	**Type**	**Code**	**Type**	**Code**						
Gear Box	H	Medical Industry	M	Planetary	P						
		Optical Industry	O	Spur	T	**Reduction Ratio**	##	-	##	-	###
		Others	Q	Others	A						

PUMP MOTOR

#3		#4		#5		#6-7		#8-9		#10-12	
Type	**Code**	**Type**	**Code**	**Type**	**Code**						
-	T	Pump	P	Air	M						
				Solenoid	T						
				Vacuum	V	Diameter	##	Length	##	Serial Number	###
				Water	W						
		Valve	V	Open	O				00		
				Close	C	No. of Valve Way	##	00	00	Serial Number	###
				Water	W				00		

Catalog Key

OPTICAL

#3		#4		#5		#6-7		#8-9		#10-12	
Type	**Code**	**Type**	**Code**	**Type**	**Code**						
				Normally Open	N		##		00		
				Others	O		##		00		
Part	P	Solenoid	S	Nomally Colse	C	Length	##	00	00		
				Rotation	R		##		00		
				With Sensor	I		##		00		
		Shutter	H	Focal Plane	M	Aperture Diameter	##	00	00		
				Blade	B		##		00	Serial Number	###
		Aperture	O	With IR-Cut	F	Diameter	##	00	00		
				Without IR-Cut	N		##		00		
Assembly	A	Brake	B	-	G	Max. Size of Appearance	##	00	00		
		IR-Cut	D	-	F	Aperture Diameter	##	00	00		
		Vibration Reduction	V	-	R	Max. Length of Magnet	##	00	00		

AUTOMOTIVE

#3		#4		#5		#6-7		#8-9		#10-12	
Type	**Code**	**Type**	**Code**	**Type**	**Code**						
		Headlight	F	System	S	CW	10	IC	01		
Auto	A	Switch	S			CCW	20		02	Serial Number	###
						Outter Control	30		03		
									04		

BRUSH MOTOR

DC BRUSH MOTOR | Ø15

Carbon Brush

	unit	CFA1518001	CFG1518003	CFG1518006
		Axial	Pinion Gear	Pinion Gear
Standard Operating Conditions				
Nominal Voltage	V	11.0	6.0	8.5
Operating Range	V	8.0~16.0	4.0~7.0	5.3~8.5
Rated Load	mNm	0.421	0.49	0.49
Direction of Rotation		CW &CCW	CW&CCW	CW&CCW
Operating Temperature Range	°C	-10~+60	-10~+60	-10~+60
Storage Temperature Range	°C	-40~+85	-30~+85	-30~+85
Electrical Characteristic				
No-Load Current	mA	70	150	180
No-Load Speed	rpm	10400	16500	29000
Rated-Load Current	mA	200	500	500
Rated-Load Speed	rpm	7600	15900	27000
Stall Torque	mNm	1.176	3.43	3.43
Max. Starting Voltage	V	3.6	1.5	1.2
Max. Starting Current	mA	350	3000	4000
Rotor Resistance	Ω	52	3.8	2.5
Output Power	W	0.33	0.815	1.38
Insulation Resistance	Mohm	1.0	1.0	1.0
Weight of Motor	g	10.3	10.6	11

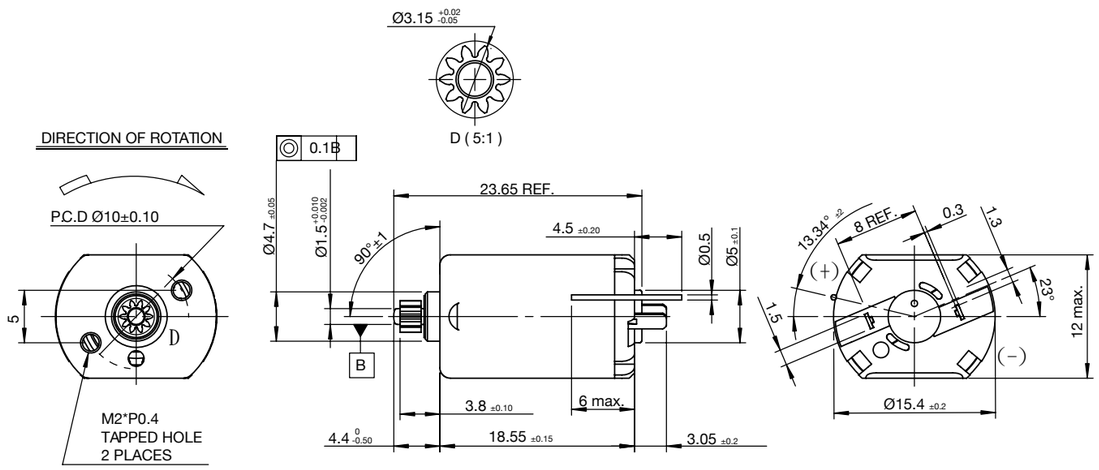

DC BRUSH MOTOR | ∅20

Carbon Brush

	unit	CFA2024003	CFG2025008	CFG2025009
		Axial	Pinion Gear	Pinion Gear
Standard Operating Conditions				
Nominal Voltage	V	12.0	22.8	12.0
Operating Range	V	10.0~16.0	10.0~24.0	10.0~14.0
Rated Load	mNm	0.98	1.98	2.45
Direction of Rotation		CW&CCW	CW&CCW	CW&CCW
Operating Temperature Range	°C	-30~+85	0~+50	-40~+105
Storage Temperature Range	°C	-40~+105	-20~70	-40~+120
Electrical Characteristic				
No-Load Current	mA	60	80	70
No-Load Speed	rpm	7500	14400	9500
Rated-Load Current	mA	140	230	350
Rated-Load Speed	rpm	6400	12300	6300
Stall Torque	mNm	5.4	9.3	5.4
Max. Starting Voltage	V	-	-	-
Max. Starting Current	mA	700	1500	900
Rotor Resistance	Ω			
Output Power	W	0.656	2.54	1.61
Insulation Resistance	Mohm	1.0	1.0	1.0
Weight of Motor	g	22.5	23.2	24

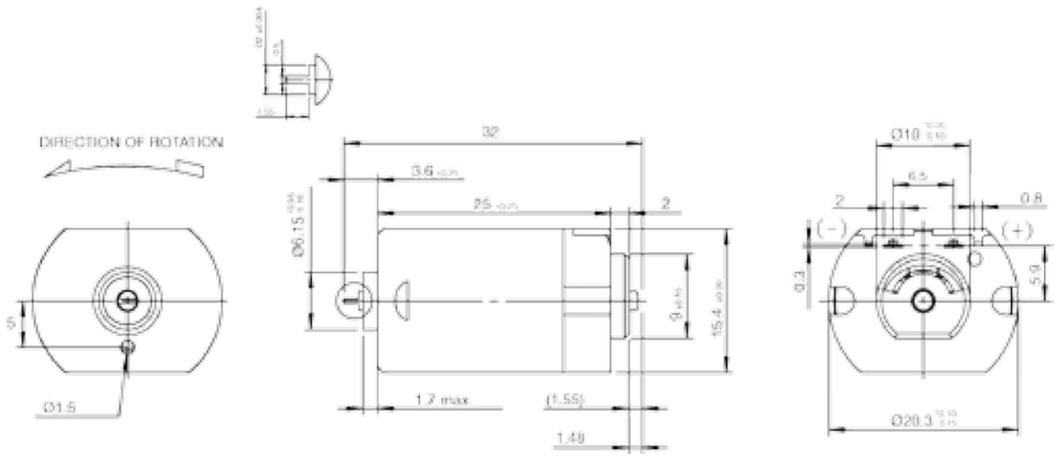

DC BRUSH MOTOR | ∅24

Carbon Brush

	unit	CFA2426001	CFA2426003	CFA2430004
		Axial	Axial	Axial
Standard Operating Conditions				
Nominal Voltage	V	12.0	2.4	12.0
Operating Range	V	8.0~15.0	1.0~4.0	8.0~15.0
Rated Load	mNm	1.96	1.96	2.45
Direction of Rotation		CW&CCW	CW&CCW	CW&CCW
Operating Temperature Range	°C	-10~+60	-10~+60	-10~+60
Storage Temperature Range	°C	-30~+85	-30~+85	-30~+85
Electrical Characteristic				
No-Load Current	mA	60	330	80
No-Load Speed	rpm	5700	9000	9200
Rated-Load Current	mA	180	1250	330
Rated-Load Speed	rpm	4100	7600	8250
Stall Torque	mNm	4.905	9.81	17.658
Max. Starting Voltage	V	1.8	1.0	1.0
Max. Starting Current	mA	510	10000	2700
Rotor Resistance	Ω	25.5	0.25	4.1
Output Power	W	0.841	1.559	2.11
Insulation Resistance	Mohm	1.0	1.0	1.0
Weight of Motor	g	30.8	33	40

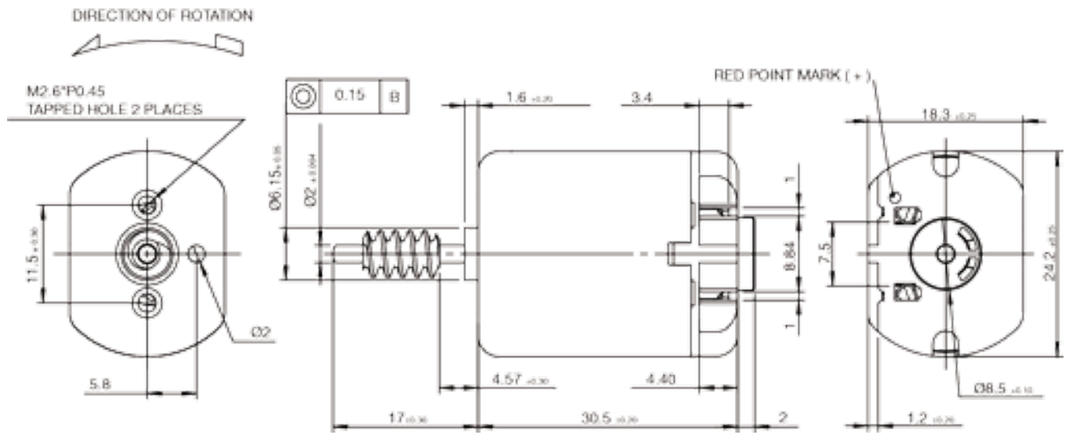

DC BRUSH MOTOR | Ø08

Metal Brush

	unit	BFA0810001	BFA0814006	BFA0820001
		Axial	Axial	Axial
Standard Operating Conditions				
Nominal Voltage	V	3.0	1.0	3.0
Operating Range	V	1.8~3.8	1.0~3.5	1.5~3.5
Rated Load	mNm	0.04	0.04	0.098
Direction of Rotation		CW&CCW	CW&CCW	CW&CCW
Operating Temperature Range	°C	-20~+70	-20~+80	-10~+70
Storage Temperature Range	°C	-40~+85	-40~+85	-40~+85
Electrical Characteristic				
No-Load Current	mA	95	45	65
No-Load Speed	rpm	27000	5900	14200
Rated-Load Current	mA	130	90	170
Rated-Load Speed	rpm	24000	4300	10600
Stall Torque	mNm	0.29	0.12	0.411
Max. Starting Voltage	V	1.4	0.8	0.8
Max. Starting Current	mA	450	300	460
Rotor Resistance	Ω	8.6	5.7	9.0
Output Power	W	0.1	0.018	0.108
Insulation Resistance	Mohm	1.0	1.0	1.0
Weight of Motor	g	1.6	2.5	3.8

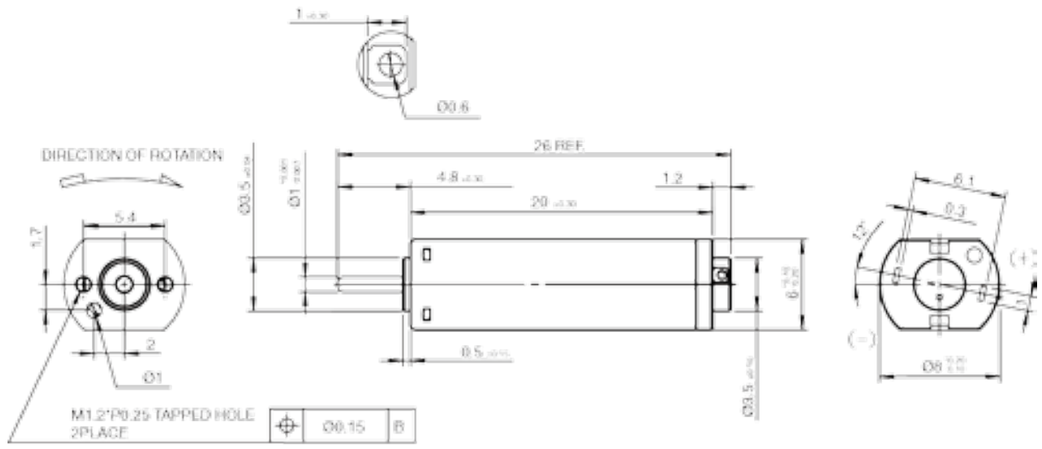

DC BRUSH MOTOR | Ø10

Metal Brush

	unit	BFA1011012	BFA1015001	BFA1020001
		Axial	Axial	Axial
Standard Operating Conditions				
Nominal Voltage	V	4.0	2.4	4.8
Operating Range	V	2.0~6.0	2.2~3.5	1.5~5.5
Rated Load	mNm	0.147	0.245	0.279
Direction of Rotation		CW&CCW	CW&CCW	CW&CCW
Operating Temperature Range	°C	-10~+70	-20~+50	-20~+70
Storage Temperature Range	°C	-40~+80	-30~+85	-30~+85
Electrical Characteristic				
No-Load Current	mA	42	95	50
No-Load Speed	rpm	12500	15800	13000
Rated-Load Current	mA	120	310	160
Rated-Load Speed	rpm	8500	11400	9000
Stall Torque	mNm	0.39	0.59	0.078
Max. Starting Voltage	V	1.5	1.4	1.0
Max. Starting Current	mA	270	1250	350
Rotor Resistance	Ω	17.4	1.90	14.5
Output Power	W	0.13	0.292	0.262
Insulation Resistance	Mohm	1.0	1.0	1.0
Weight of Motor	g	3	4	5

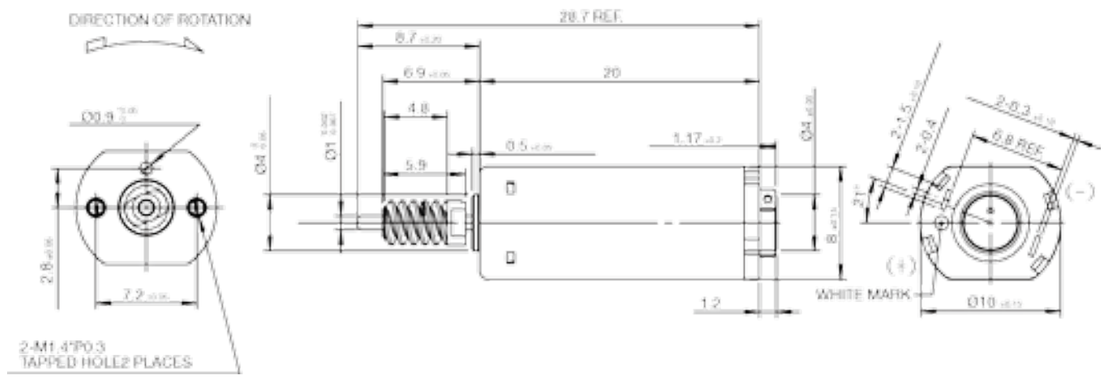

DC BRUSH MOTOR | Ø12

Metal Brush

	unit	BFA1220030	BFG1215002
		Axial	Pinion Gear
Standard Operating Conditions			
Nominal Voltage	V	2.5	7.4
Operating Range	V	2.0~5.0	2.0~8.0
Rated Load	mNm	0.196	0.294
Direction of Rotation		CW&CCW	CW&CCW
Operating Temperature Range	°C	-20~+60	-10~+50
Storage Temperature Range	°C	-30~+70	-30~+80
Electrical Characteristic			
No-Load Current	mA	35	100
No-Load Speed	rpm	5200	25000
Rated-Load Current	mA	85	200
Rated-Load Speed	rpm	3950	21000
Stall Torque	mNm	0.78	1.47
Max. Starting Voltage	V	1.0	1.0
Max. Starting Current	mA	300	110
Rotor Resistance	Ω	9.8	7.7
Output Power	W	0.081	0.628
Insulation Resistance	Mohm	1.0	1.0
Weight of Motor	g	7.8	5.2

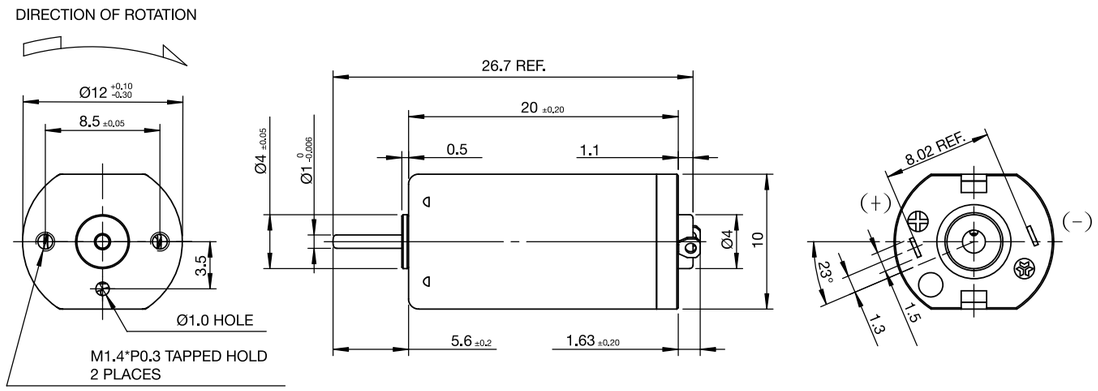

DC BRUSH MOTOR | Ø14

Metal Brush

	unit	BFA1420003
		Axial
Standard Operating Conditions		
Nominal Voltage	V	6.0
Operating Range	V	4.0~7.2
Rated Load	mNm	0.88
Direction of Rotation		CW&CCW
Operating Temperature Range	°C	-20~+50
Storage Temperature Range	°C	-30~+70
Electrical Characteristic		
No-Load Current	mA	80
No-Load Speed	rpm	15800
Rated-Load Current	mA	365
Rated-Load Speed	rpm	11700
Stall Torque	mNm	3.03
Max. Starting Voltage	V	-
Max. Starting Current	mA	1365
Rotor Resistance	Ω	4.6
Output Power	W	1.07
Insulation Resistance	Mohm	1.0
Weight of Motor	g	10.6

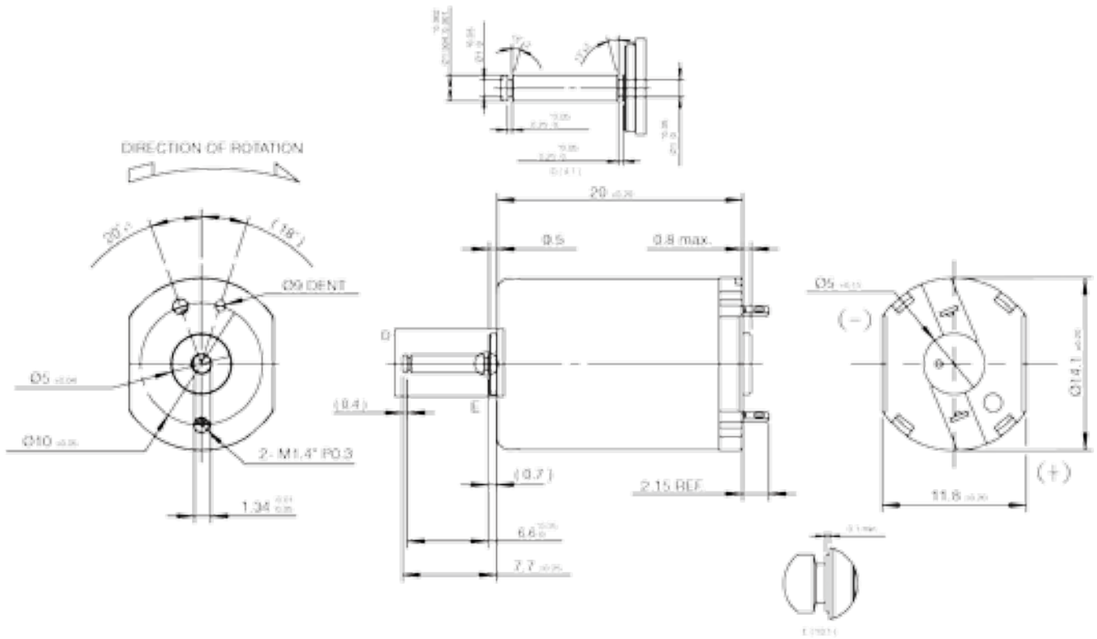

DC BRUSH MOTOR | Ø15

Metal Brush

	unit	BFA1518008	BFA1526043
		Axial	Axial
Standard Operating Conditions			
Nominal Voltage	V	6.0	12.0
Operating Range	V	2.5~7.5	14.0~13
Rated Load	mNm	0.49	0.98
Direction of Rotation		CW&CCW	CW&CCW
Operating Temperature Range	°C	-30~+85	-10~+40
Storage Temperature Range	°C	-40~+90	-20~+60
Electrical Characteristic			
No-Load Current	mA	110	40
No-Load Speed	rpm	1480	9800
Rated-Load Current	mA	300	140
Rated-Load Speed	rpm	11700	7600
Stall Torque	mNm	1.86	3.73
Max. Starting Voltage	V	1.5	1.8
Max. Starting Current	mA	1230	500
Rotor Resistance	Ω	6.7	28
Output Power	W	0.6	0.77
Insulation Resistance	Mohm	1.0	1.0
Weight of Motor	g	10.5	17.5

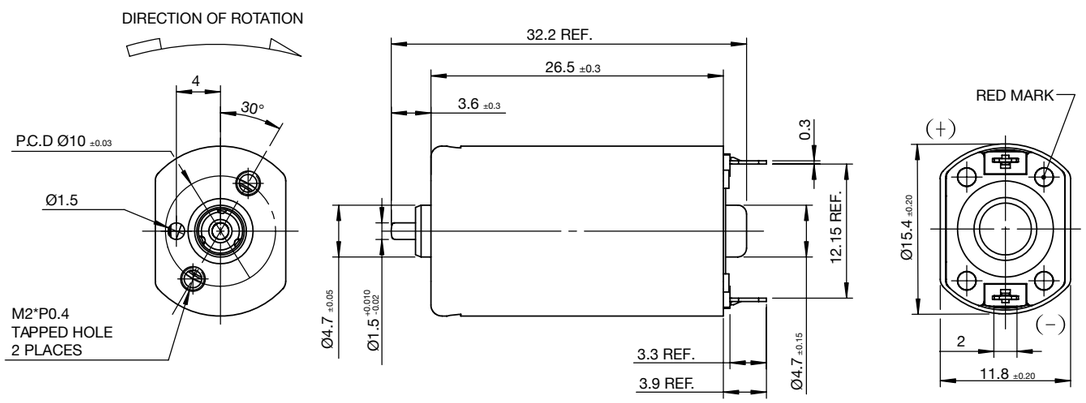

DC BRUSH MOTOR | Ø17

Metal Brush

	unit	BRA1717012
Standard Operating Conditions		
Nominal Voltage	V	4.5
Operating Range	V	2.0~5.0
Rated Load	mNm	0.196
Direction of Rotation		CW&CCW
Operating Temperature Range	°C	-20~+70
Storage Temperature Range	°C	-30~+85
Electrical Characteristic		
No-Load Current	mA	110
No-Load Speed	rpm	12500
Rated-Load Current	mA	180
Rated-Load Speed	rpm	11000
Stall Torque	mNm	1.27
Max. Starting Voltage	V	1.0
Max. Starting Current	mA	660
Rotor Resistance	Ω	7.5
Output Power	W	0.25
Insulation Resistance	Mohm	1.0
Weight of Motor	g	15.2

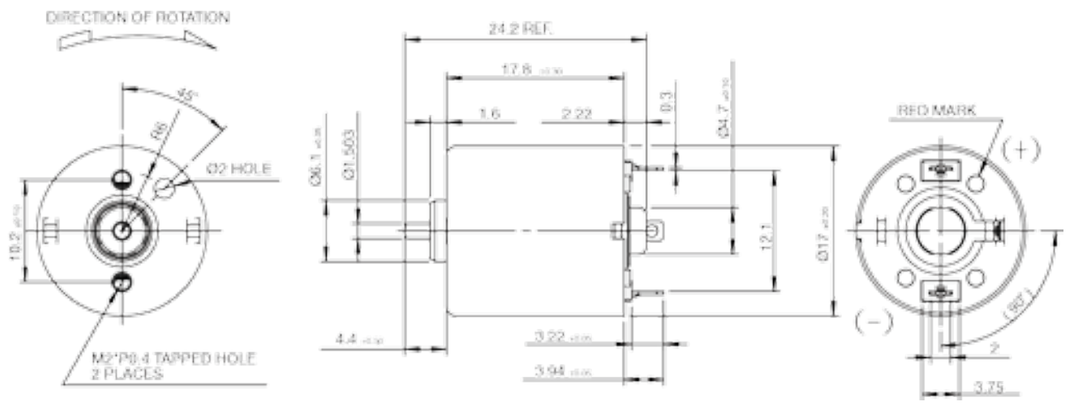

STEPPING MOTOR

STEPPING MOTOR | ∅06

SR SERIES

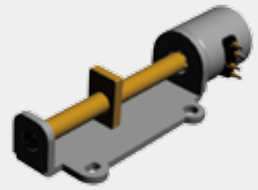

	unit	SRL0603006	SRB0605015	SRG0605027	SRB0607022
		Leadscrew	Bracket	Pinion Gear	Bracket
Electrical Characteristic					
Nominal Voltage	V	3.3	4.0	3.3	5.0
Coil Resistance	Ω	30	50	30	40
No. of Phases		1-2	2	2	2
Step Angle	°/step	9	18	18	9
Excitation Method		1-2	2	2-2	2
Drive Mode		Bi-Polar	Bi-Polar	Bi-Polar	Bi-Polar
Max. Starting Frequency	PPS	1800	2000	2000	2500
Max. Stewing Frequency	PPS	4000	1100	1200	1500
Insulation Class		E	E	E	E
Insulation Strength	V	100	100	100	100
Insulation Resistance	Ω	50M	1M	1M	1M
Operating Temperature Range	°C	-20~+70	-10~+60	-40~+80	-10~+60
Operating Frequency	**PPS**	**1000**	**600**	**400**	**500**
Pull-in Torque	mNm	0.05	0.12	0.6	-
Pull-out Torque	mNm	0.06	-	0.7	-

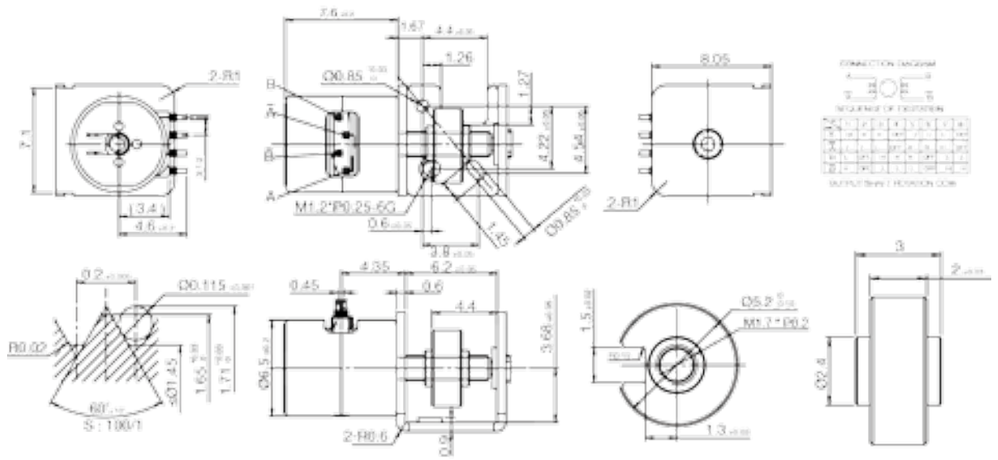

STEPPING MOTOR | ∅08

SR SERIES

	unit	SRG0808023	SRA0808027	SRG0808038	SRB0808055	SRB0808064
		Pinion Gear	Axial	Pinion Gear	Bracket	Bracket
Electrical Characteristic						
Nominal Voltage	V	3.3	3.3	3.0	3.3	5.0
Coil Resistance	Ω	20	21	40	20	80
No. of Phases		2	2	2	2	1-2
Step Angle	°/step	18	18	18	18	29
Excitation Method		2	2	2	2	2
Drive Mode		Bi-Polar	Bi-Polar	Bi-Polar	Bi-Polar	Bi-Polar
Max. Starting Frequency	PPS	800	800	1000	800	800
Max. Stewing Frequency	PPS	1100	110	1200	2000	1800
Insulation Class		E	E	E	E	E
Insulation Strength	V	100	100	100	100	100
Insulation Resistance	Ω	1.0M	1.0M	1.0M	1.0M	1.0M
Operating Temperature Range	°C	-30~+80	-40~+60	-30~+80	-40~+70	-10~+60
Operating Frequency	**PPS**	**400**	**400**	**800**	**500**	**500**
Pull-in Torque	mNm	0.21	0.21	0.08	-	0.12
Pull-out Torque	mNm	0.25	0.28	0.12	-	0.20

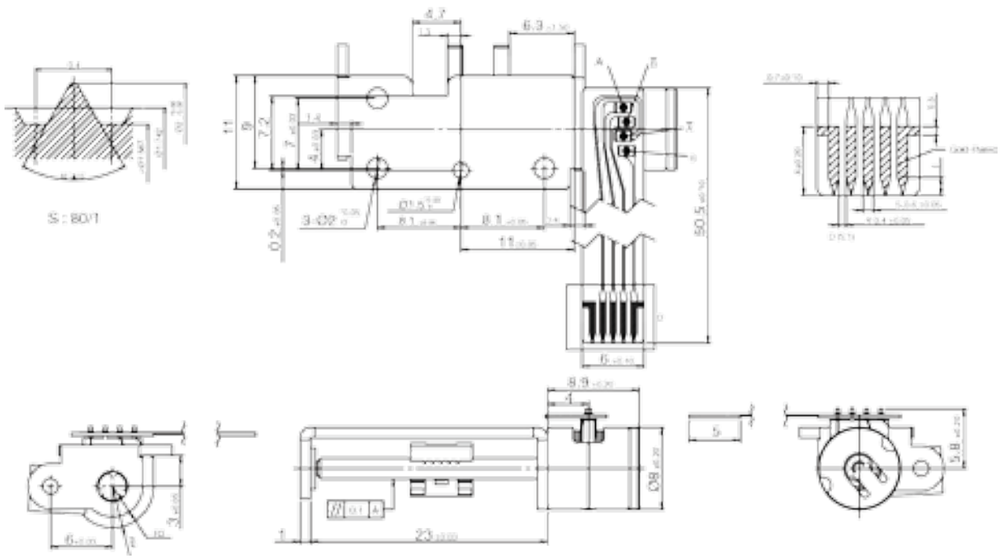

STEPPING MOTOR | ∅10

SR SERIES

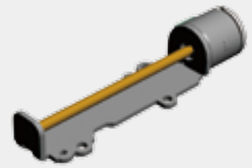

	unit	SRA1008004	SRB1008013	SRG1008031	SRA1008048	SRB1008092
		Axial	Bracket	Pinion Gear	Axial	Bracket
Electrical Characteristic						
Nominal Voltage	V	5.0	5.0	5.0	5.0	4.6
Coil Resistance	Ω	45	55	20	15	40
No. of Phases		2	2	2	2	2
Step Angle	°/step	18	18	18	18	9
Excitation Method		2	2	2	2	4W1-2
Drive Mode		Bi-Polar	Bi-Polar	Bi-Polar	Bi-Polar	Bi-Polar
Max. Starting Frequency	PPS	800	800	1000	1000	1200
Max. Stewing Frequency	PPS	1300	1200	2500	2500	2200
Insulation Class		E	E	E	E	E
Insulation Strength	V	300	300	100	100	300
Insulation Resistance	Ω	100	50M	1M	1M	50M
Operating Temperature Range	°C	0~50	-10~+70	-10~+60	-10~+60	-20~+80
Operating Frequency	**PPS**	**500**	**480**	**500**	**500**	**480**
Pull-in Torque	mNm	0.40	0.28	0.65	0.75	0.2
Pull-out Torque	mNm	0.42	0.30	-	-	-

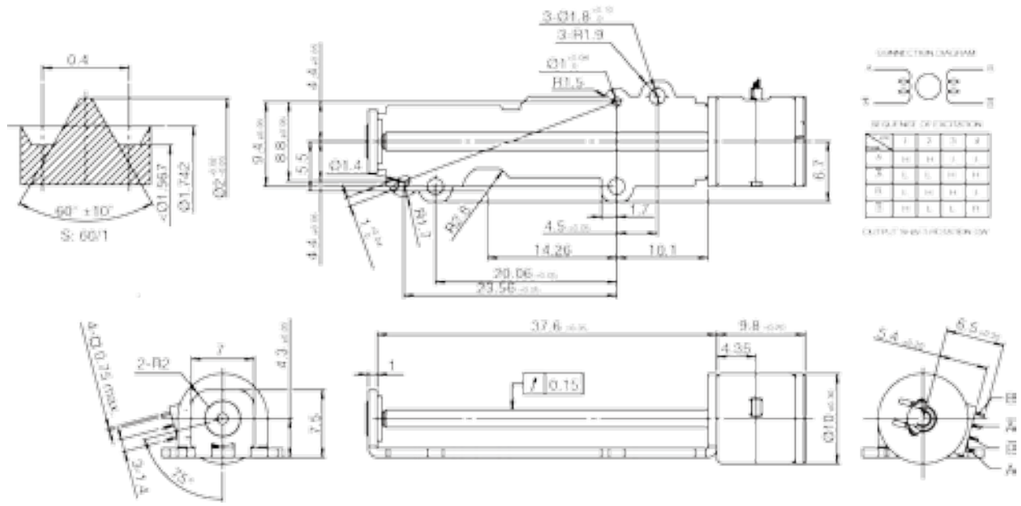

STEPPING MOTOR | Ø15

SR SERIES

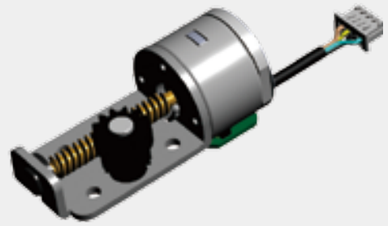

	unit	SRB1509004	SRA1509013	SRB1509028	SRG1509030	SRB1509040
		Bracket	Axial	Bracket	Pinion Gear	Bracket
Electrical Characteristic						
Nominal Voltage	V	4.5	3.3	5.0	5.0	4.5
Coil Resistance	Ω	10	10	10	10	10
No. of Phases		2	2	2	2	2
Step Angle	°/step	18	18	18	18	18
Excitation Method		2	2	2	2	2
Drive Mode		-	-	-	-	-
Max. Starting Frequency	PPS	900	800	800	1100	900
Max. Stewing Frequency	PPS	2000	1200	1500	1800	2000
Insulation Class		E	F	E	F	E
Insulation Strength	V	500	200	200	200	200
Insulation Resistance	Ω	30	100M	100M	100M	30M
Operating Temperature Range	°C	0~+55	-20~+75	-20~+80	-40~+125	0~55
Operating Frequency	**PPS**	**500**	**500**	**500**	**500**	**500**
Pull-in Torque	mNm	1.2	0.6	0.12	0.12	0.15
Pull-out Torque	mNm	1.6	0.9	0.18	0.18	0.16

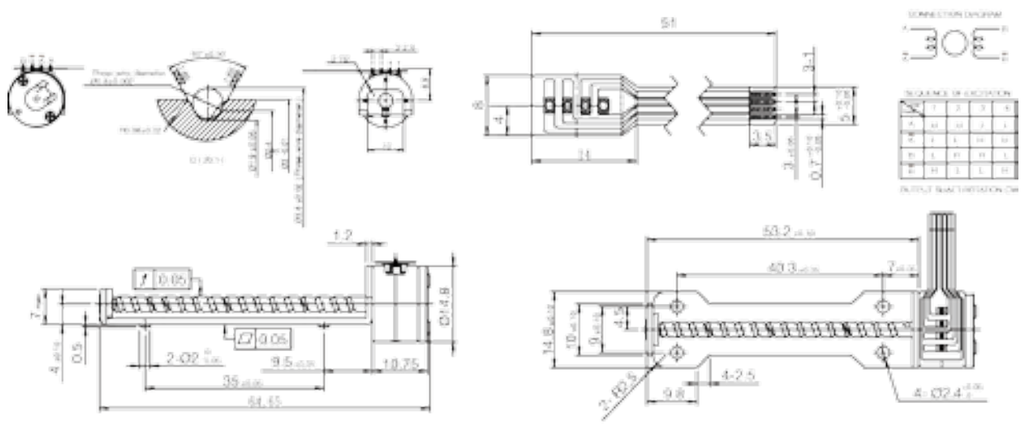

STEPPING MOTOR | Ø10

Metal Gearbox

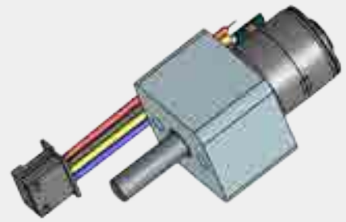

	unit	SRM1008003	SRM1008014	SRM1008025	HOT0052001	HQT0204002	HOT0298014	SRM1008011
Dimension	mm	ϕ10*31.2L	ϕ10*19.2L	ϕ10*44L	ϕ10*19.2L	ϕ10*19.5L	ϕ10*19.5L	ϕ10*19.5L
Electrical Characteristic								
Nominal Voltage	V	3.0	-	5.0	5.0	3.3	5.0	5.0
Rated Current	mA	-	75	-	-	-	-	-
Operating Range	V	-	-	-	-	-	-	-
Coil Resistance	Ω	7	50	30	15	20	19	19
No. of Phases		2	2	2				
Step Angle	°/step	0.346	1.2	0.06	0.346	0.088	0.06	0.18
Excitation Method		2-2	2-2	2-2	2-2	2-2	2-2	2-2
Drive Mode		Bi-Polar	-	-	Bi-Polar	-	-	-
Operating Temperature Range	°C	-10~+60	-30~+85	-20~+75	-10~+60	-10~+60	-10~+70	-10~+70
Storage Temperature	°C	-	-40~+105	-	-40~+80	-	-30~+70	-30~+70
Mechanical Specification								
Reduction Ratio		1:52	1:15	1:298	1:52	1:204	1:298	1:100
Output Torque	mNm	250	60	1000	250	200	100	300
Max Starting Frequency	PPS	000	1280	1000	1000	800	600	600
Max Slewing Frequency	PPS	2500	1400	2000	2500	1100	1900	1900
Mechanical Noise	dB	-	60	-	60	60	40	60
Power Supply Type								
Type		AC	AC	AC	AC	AC	AC	AC
FPC		x	x	x	x	x	x	o
Lead Wire		x	o	o	x	o	o	x
Pin Connector		x	o	o	x	o	o	x

CONNECTION DIAGRAM

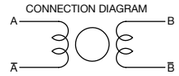

SEQUENCE OF EXCITATION

STEP / PHASE	1	2	3	4
A	H	H	L	L
Ā	L	L	H	H
B	L	H	H	L
B̄	H	L	L	H

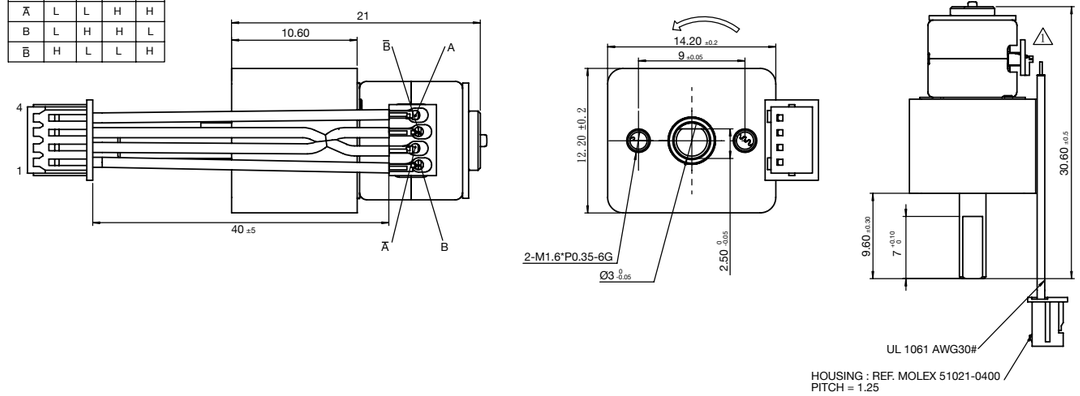

STEPPING MOTOR | Ø10

Metal Gearbox

	unit	HOT0052012	HOT0063003	SRM1008002	SRM1008009
Dimension	mm	ϕ10*24.7L	ϕ10*26.9L	ϕ10*45.4L	ϕ10*47.22L
Electrical Characteristic					
Nominal Voltage	V	5.0	5.0	3.3	-
Rated Current	mA	-	-	-	200
Operating Range	V	-	4.5~5.5	-	-
Coil Resistance	Ω	15	19	15	19
No. of Phases		-	-	-	-
Step Angle	°/step	0.346	0.143	18	0.134
Excitation Method		2-2	1-2	2-2	2-2
Drive Mode		Bi-Polar	-	-	-
Operating Temperature Range	°C	-10~+60	-30~+85	-10~+75	-40~+70
Storage Temperature	°C	-40~+80	-40~+105	-	-40~+70
Mechanical Specification					
Reduction Ratio		1:52	1:63.07	1:900	1:298
Output Torque	mNm	250	45	1200	100
Max Starting Frequency	PPS	1000	1000	800	800
Max Slewing Frequency	PPS	2500	2500	1200	1000
Mechanical Noise	dB	60	40	-	60
Power Supply Type					
Type		AC	AC	AC	AC
FPC		x	x	x	o
Lead Wire		o	o	x	x
Pin Connector		o	o	x	x

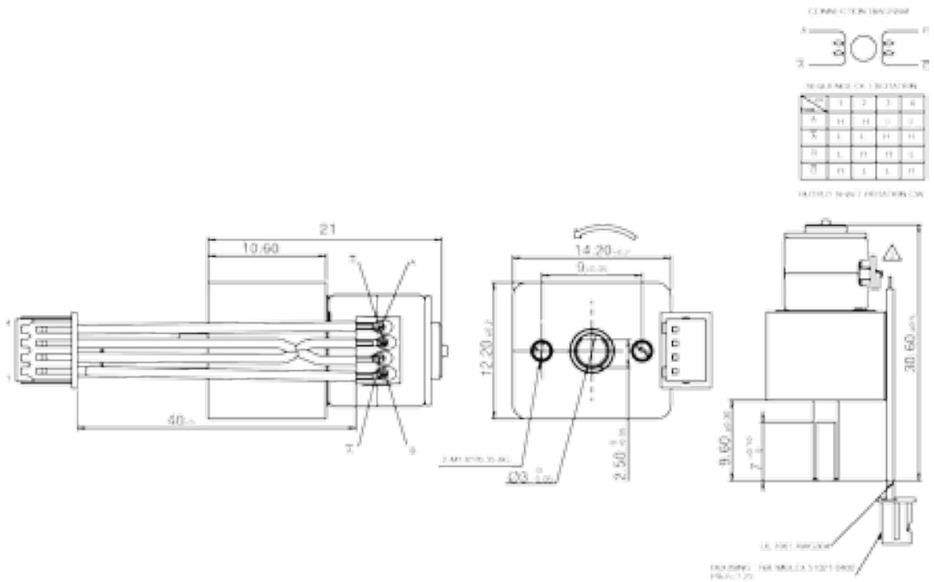

STEPPING MOTOR | Ø15

Metal Gearbox

	unit	HOT0096012	SRM1509009	HOT0233016	SRM1509030
Dimension	mm	ϕ15*19.9L	Φ14.8*21.6L	ϕ14.8*22.7L	ϕ14.8*28.1L
Electrical Characteristic					
Nominal Voltage	V	5.0	3.3	12.0	5.0
Rated Current	mA	-	-	-	-
Operating Range	V	-	-	-	-
Coil Resistance	Ω	10	10	40	10
No. of Phases		-	-	-	-
Step Angle	°/step	0.188	0.514	0.077	0.188
Excitation Method		2-2	2-2	2-2	2-2
Drive Mode		-	-	Bi-Polar	-
Operating Temperature Range	°C	0~+55	0~+55	0~+55	-40~+125
Storage Temperature	°C	-	-	0~+55	-
Mechanical Specification					
Reduction Ratio		96	1:35	1:233	96
Output Torque	mNm	310	230	800	310
Max Starting Frequency	PPS	800	800	1000	800
Max Slewing Frequency	PPS	900	1200	1800	900
Mechanical Noise	dB	-	-	60	-
Power Supply Type					
Type		AC	AC	AC	AC
FPC		x	x	x	x
Lead Wire		o	o	o	o
Pin Connector		o	o	o	o

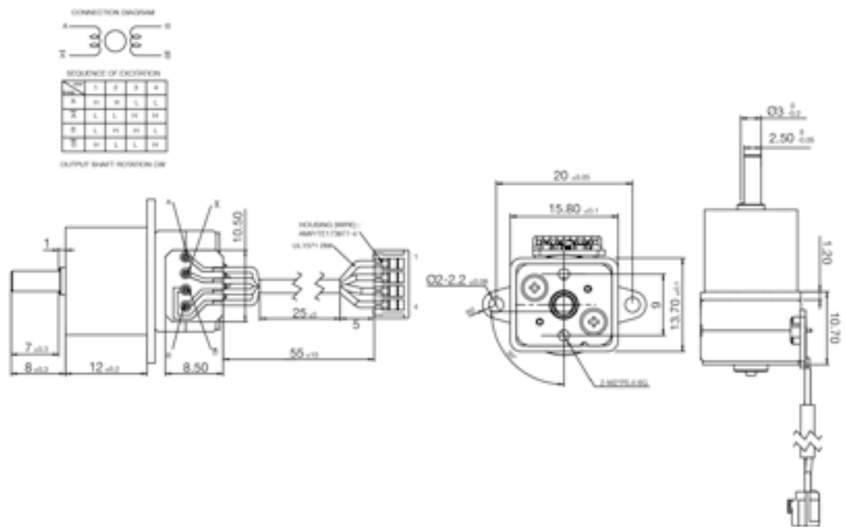

STEPPING MOTOR | ∅06

Plastic Gearbox

	unit	HOA0025006	SRP0605002					
Dimension	mm	R23.3*R14.5*R10.7	Φ6.5*15.3L					
Electrical Characteristic								
Nominal Voltage	V	2.5	3.3					
Rated Current	mA	-	-					
Operating Range	V	1.0~3.0	2.8~4.5					
Coil Resistance	Ω	11	30					
No. of Phases		-	-					
Step Angle	°/step	0.714	0.165					
Excitation Method		2-2	2-2					
Drive Mode		Bi-Polar						
Operating Temperature Range	°C	-20~+60	-20~+80					
Storage Temperature	°C	-30~+70	-20~+80					
Mechanical Specification								
Reduction Ratio		1:25.2	1:109					
Output Torque	mNm	15.3	60					
Max Starting Frequency	PPS	-	-					
Max Slewing Frequency	PPS	-	-					
Mechanical Noise	dB	65	60					
Power Supply Type								
Type		AC	AC					
FPC		x	x					
Lead Wire		o	o					
Pin Connector		o	o					

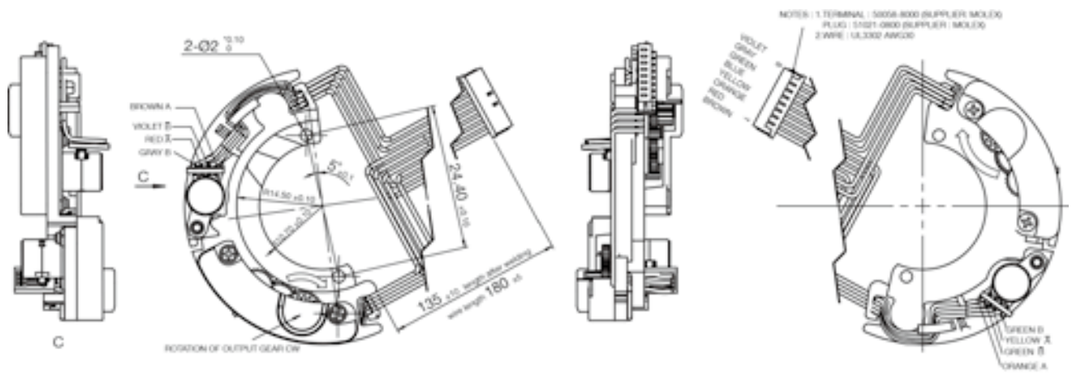

STEPPING MOTOR | ∅08

Plastic Gearbox

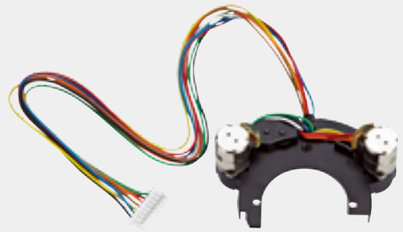

	unit	HOA0067007	HOA0069001	SRP0808026	SRP0808032	SRP0808001	SRP0808006	HOA0097005
Dimension	mm	R23.5*R16.3*R14.5	R24*R14.64*R9.7	Φ46.8*21*13.35	Φ08*8L	Φ8*17L	Φ8*18L	Φ8*59.276L
Electrical Characteristic								
Nominal Voltage	V	3.3	3.0	3.0	3.0	3.3	3.3	5.0
Rated Current	mA	-	-	-	-	-	-	-
Operating Range	V	3.3~4.5	3.0~5.0	2.0~4.0	3.0~5.0	1.5~4.0	3.3~4.5	3.0~5.0
Coil Resistance	Ω	21	20	40	40	60	16	35
No. of Phases		2	-	-	-	-	-	-
Step Angle	°/step	0.2687	0.187	0.224	0.514	0.514	0.29	0.1846
Excitation Method		2-2	2-2	2-2	1-2	2-2	2-2	2-2
Drive Mode		Bi-Polar	-	Bi-Polar	Bi-Polar	-	Bi-Polar	Bi-Polar
Operating Temperature Range	°C	-20~+80	-30~+80	-10~+60	-30~+80	-20~+80	-40~+70	-20~+80
Storage Temperature	°C	-40~+80	-40~+80	-20~+70	-30~+80	-	-	-40~+80
Mechanical Specification								
Reduction Ratio		1:67	1:69	1:80.3	1:80.3	1:200	1:62	1:97.48
Output Torque	mNm	70	50	35	230	130	50	20
Max Starting Frequency	PPS	-	-	800	1100	-	900	600
Max Slewing Frequency	PPS	-	-	1000	1800	-	1300	1800
Mechanical Noise	dB	60	60	60	40	-	-	45
Power Supply Type								
Type		AC	AC	AC	AC	AC	AC	AC
FPC		x	x	o	x	x	o	x
Lead Wire		o	o	x	o	o	x	o
Pin Connector		o	o	x	o	o	x	o

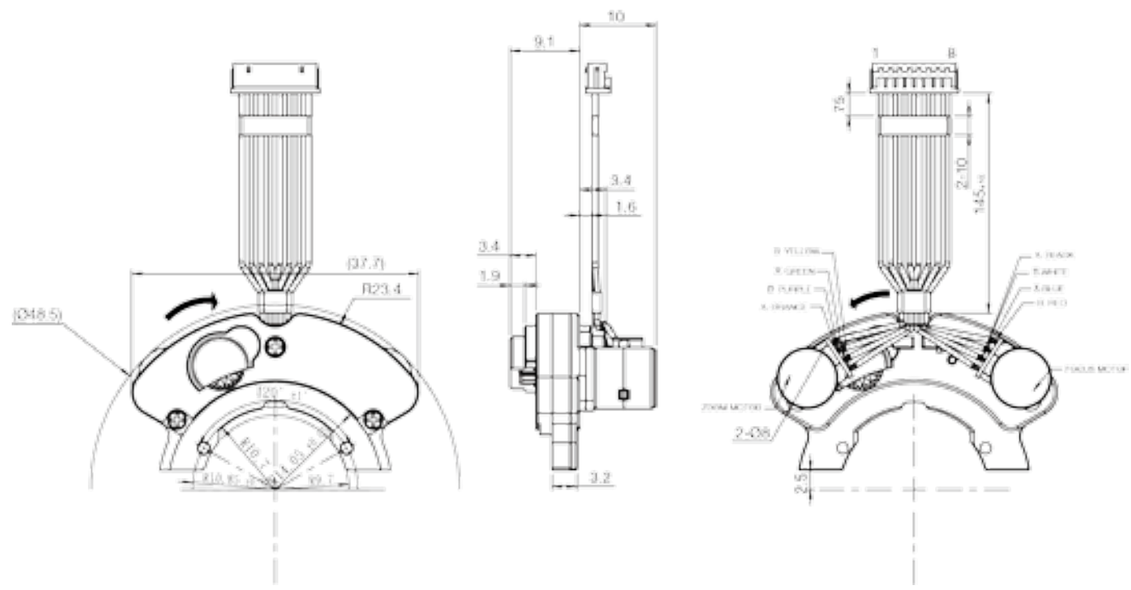

STEPPING MOTOR | Ø10

Plastic Gearbox

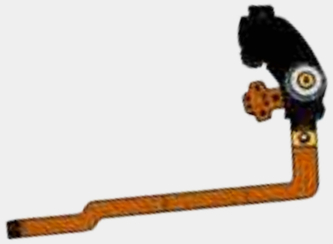

	unit	SRP1008002						
Dimension	mm	Φ55*13L						
Electrical Characteristic								
Nominal Voltage	V	3.3						
Rated Current	mA	-						
Operating Range	V	3.3~4.5						
Coil Resistance	Ω	16						
No. of Phases		-						
Step Angle	°/step	0.29						
Excitation Method		2-2						
Drive Mode		Bi-Polar						
Operating Temperature Range	°C	-40~+70						
Storage Temperature	°C	-						
Mechanical Specification								
Reduction Ratio		1:62						
Output Torque	mNm	200						
Max Starting Frequency	PPS	900						
Max Slewing Frequency	PPS	1300						
Mechanical Noise	dB	-						
Power Supply Type								
Type		AC						
FPC		o						
Lead Wire		x						
Pin Connector		x						

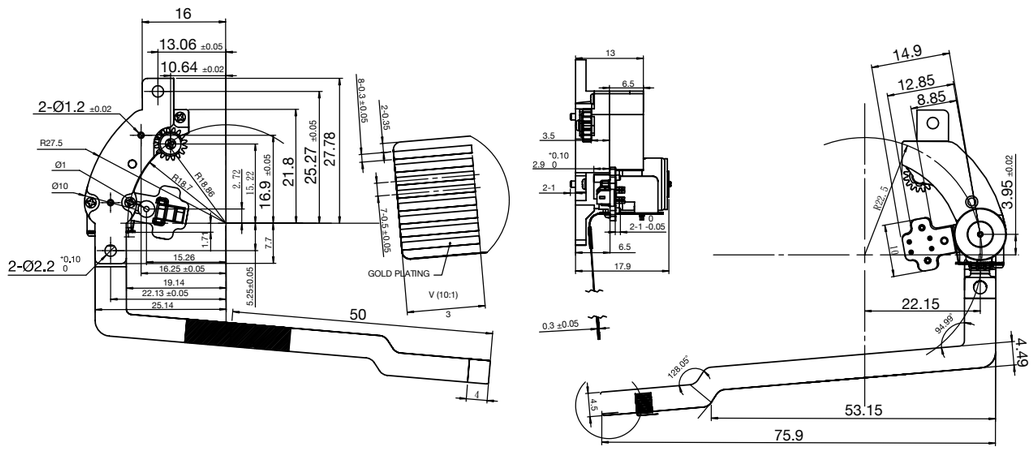

GEAR MOTOR | ∅12

Metal Gear

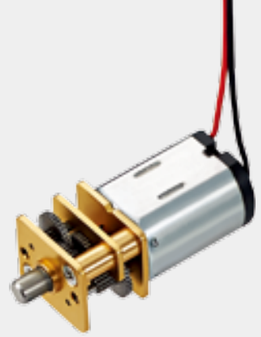

	unit	BFM1215001	BFM1215021	BFM1215079	BFM1215081	BFM1215084
Dimension	mm	ϕ12*15	ϕ12*15	ϕ12*15	ϕ12*15	ϕ12*15
Standard Operating Conditions						
Nominal Voltage	V	4.5	4.5	3.7	4.5	3.0
Operating Range	V	3.0~6.0	3.0~6.0	2.0~5.0	3.0~6.0	3.0~4.0
Rated Load	mNm	500	200	500	30	200
Direction of Rotation		CW&CCW	CW&CCW	CW&CCW	CW&CCW	CW&CCW
Operating Temperature Range	°C	-20`+50	-35~+50	-40~+65	-40~+85	-10~+65
Storage Temperature Range	°C	-30~+70	-40~+70	-40~+85	-40~+80	-20~+70
Mechanical Specification						
No-Load Current	mA	90	80	65	100	100
No-Load Speed	rpm	54	107	55	1086	141
Rated-Load Current	mA	220	250	300	270	350
Rated-Load Speed	rpm	40	93	37	870	112
Stall Torque	mNm	1500	755	704	112.2	622
Stall Current	mA	880	800	1000	1500	1000
Output Power	W	0.99	1.125	1.11	1.215	7.875
Mechanical Noise	dB	60	60	65	60	70
Gearhead						
Gearhead Length	mm	4.5	4.5	10	4	10
Reduction Ratio		1:298	1:150	1:210	1:15	1:100
Gearhead Type		Spur	Spur	Spur	Spur	Spur
Number Of Stages		5	4	5	3	4

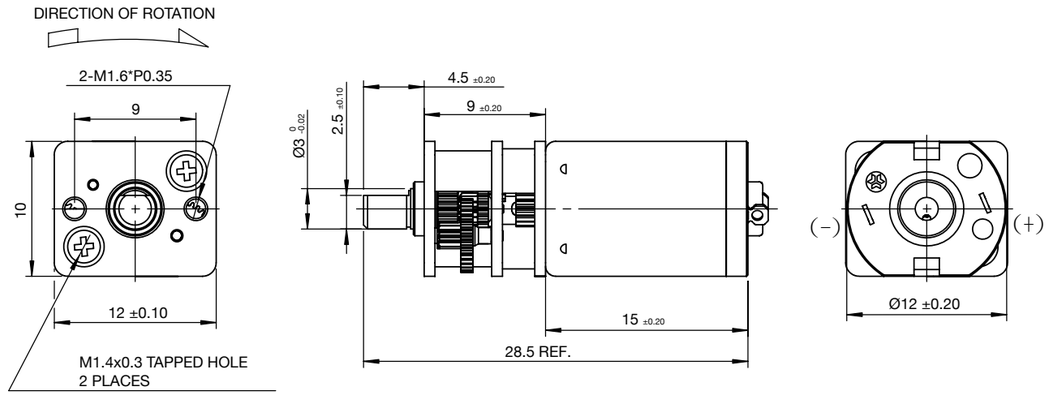

GEAR MOTOR | ∅12

Metal Gear

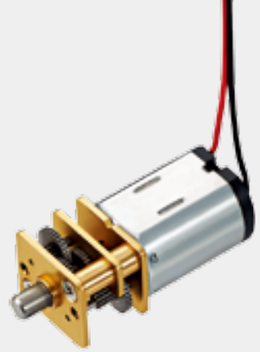

	unit	BFM1220011	BFM1220009#	HOT0052014	BFM1225002
Dimension	mm	ϕ12*20	ϕ12*20	ϕ12*20	ϕ12*25
Standard Operating Conditions					
Nominal Voltage	V	3.6	4.5	4.5	3.0
Operating Range	V	2.0~5.0	2.0~5.0	2.5~6.0V	1.5~4.5
Rated Load	mNm	500	725	200	200
Direction of Rotation		CW&CCW	CW&CCW	CW&CCW	CW&CCW
Operating Temperature Range	°C	-20~+65	-40~+65	-20~+50	-20~+50
Storage Temperature Range	°C	-	-40~+85	-30~+70	-30~+70
Mechanical Specification					
No-Load Current	mA	120	50	150	70
No-Load Speed	rpm	35	34	300	70
Rated-Load Current	mA	-	180	500	180
Rated-Load Speed	rpm	-	30	150	53
Stall Torque	mNm	3998	397.8	755	600
Stall Current	mA	1500	1000	800	250
Output Power	W	1.08	0.81	1.125	1.8
Mechanical Noise	dB	64	64	60	60
Gearhead					
Gearhead Length	mm	10	1.5	4.5	4.5
Reduction Ratio		1:500	1:378	1:52	1:52
Gearhead Type		Spur	Spur	Spur	Spur
Number Of Stages		6	5	3	4

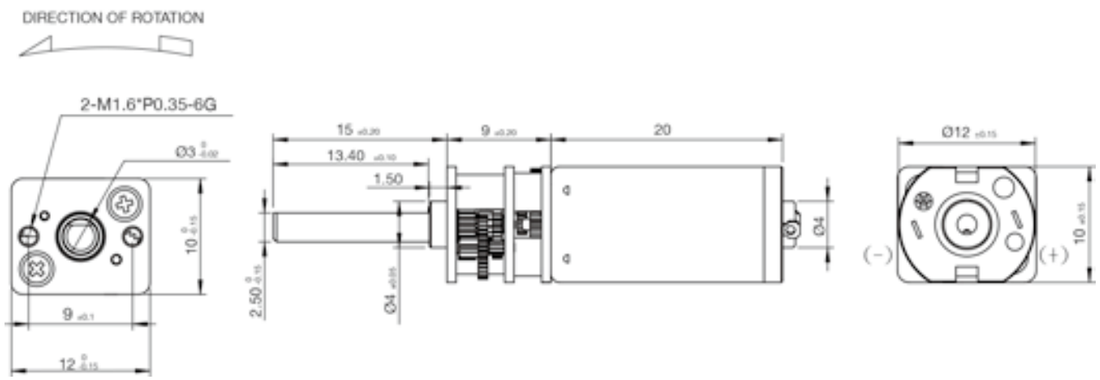

GEAR MOTOR | ∅12

Metal Gear

	unit	BFM1220006
Dimension	mm	ϕ12*20
Standard Operating Conditions		
Nominal Voltage	V	12.0
Operating Range	V	6.0~13.0
Rated Load	mNm	250
Direction of Rotation		CW&CCW
Operating Temperature Range	°C	-20~+60
Storage Temperature Range	°C	-40~+80
Mechanical Specification		
No-Load Current	mA	65
No-Load Speed	rpm	80
Rated-Load Current	mA	160
Rated-Load Speed	rpm	74
Stall Torque	mNm	1275
Stall Current	mA	2000
Output Power	W	1.92
Mechanical Noise	dB	60
Gearhead		
Gearhead Length	mm	9.5
Reduction Ratio		1:210
Gearhead Type		Spur
Number Of Stages		4

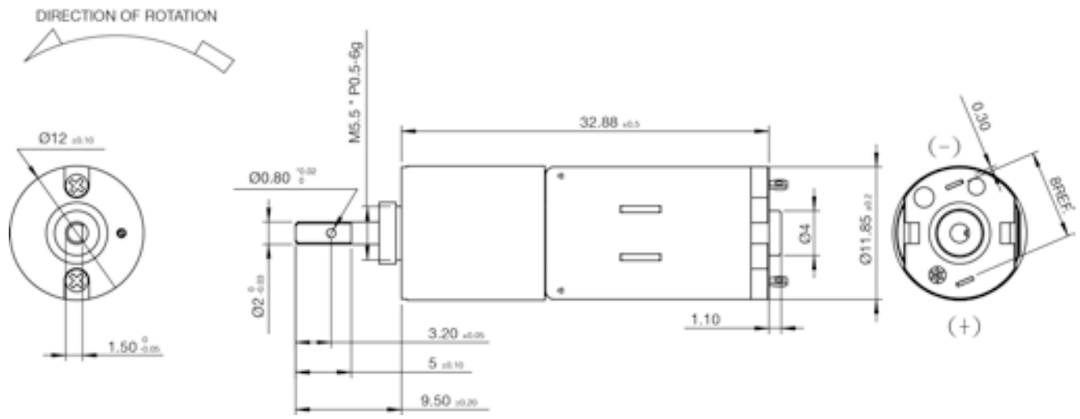

GEAR MOTOR | ∅12

Metal Gear

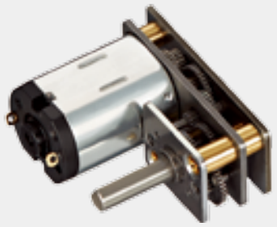

	unit	BFM1215086	BFM1215087
Dimension	mm	ϕ12*15	ϕ12*15
Standard Operating Conditions			
Nominal Voltage	V	5.0	12
Operating Range	V	3.0~6.0	10.0~14.0
Rated Load	mNm	780	350
Direction of Rotation		CW&CCW	CW&CCW
Operating Temperature Range	°C	-10~+50	-10~+50
Storage Temperature Range	°C	-20~+75	-20~+75
Mechanical Specification			
No-Load Current	mA	70	40
No-Load Speed	rpm	30	78
Rated-Load Current	mA	220	120
Rated-Load Speed	rpm	23	61
Stall Torque	mNm	1754.4	948.6
Stall Current	mA	600	1
Output Power	W	1.1	1.44
Mechanical Noise	dB	60	60
Gearhead			
Gearhead Length	mm	9	10
Reduction Ratio		1:500	1:200
Gearhead Type		Spur	Spur
Number Of Stages		6	4

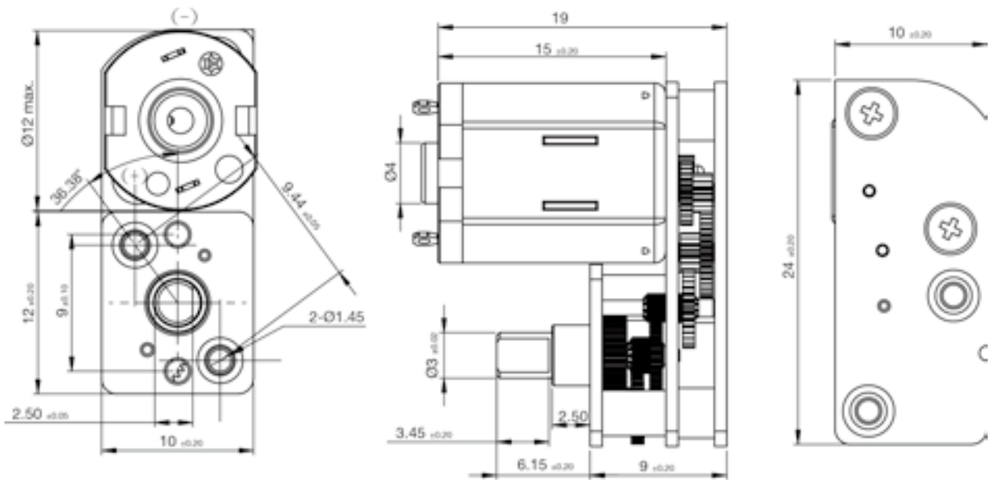

GEAR MOTOR | ∅14

Metal Gear

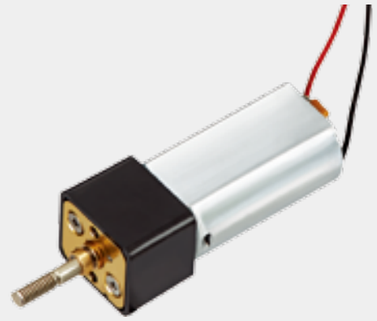

	unit	BFM1420001
Dimension	mm	Φ14*20
Standard Operating Conditions		
Nominal Voltage	V	2.5
Operating Range	V	1.0~3.0
Rated Load	mNm	7.35
Direction of Rotation		CW&CCW
Operating Temperature Range	°C	-10~+60
Storage Temperature Range	°C	-20~+70
Mechanical Specification		
No-Load Current	mA	75
No-Load Speed	rpm	45
Rated-Load Current	mA	95
Rated-Load Speed	rpm	43
Stall Torque	mNm	98
Stall Current	mA	900
Output Power	W	0.2
Mechanical Noise	dB	45
Gearhead		
Gearhead Length	mm	7
Reduction Ratio		1:150
Gearhead Type		Spur
Number Of Stages		4

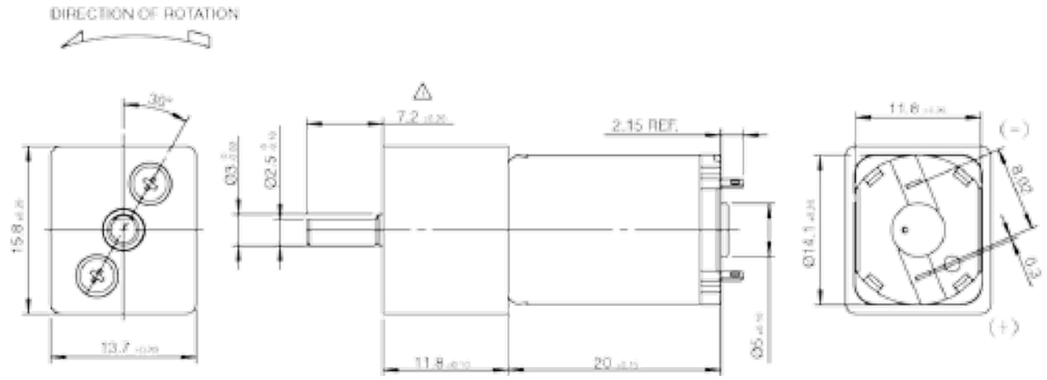

GEAR MOTOR | ∅15

Metal Gear

	unit	BFM1526020	BFM1526004
Dimension	mm	ϕ15*26	ϕ15*26.5
Standard Operating Conditions			
Nominal Voltage	V	6.0	12.0
Operating Range	V	4.5~6.5	10.0~14.0
Rated Load	mNm	100	500
Direction of Rotation		CW&CCW	CW&CCW
Operating Temperature Range	°C	-20~+70	-10~+40
Storage Temperature Range	°C	-40~+85	-20~+60
Mechanical Specification			
No-Load Current	mA	20	60
No-Load Speed	rpm	3.3	42
Rated-Load Current	mA	49	120
Rated-Load Speed	rpm	2.5	39
Stall Torque	mNm	1499	4998
Stall Current	mA	300	800
Output Power	W	0.6	1.44
Mechanical Noise	dB	60	60
Gearhead			
Gearhead Length	mm	13.5	4.4
Reduction Ratio		1:233	1:233
Gearhead Type		Spur	Spur
Number Of Stages		4	4

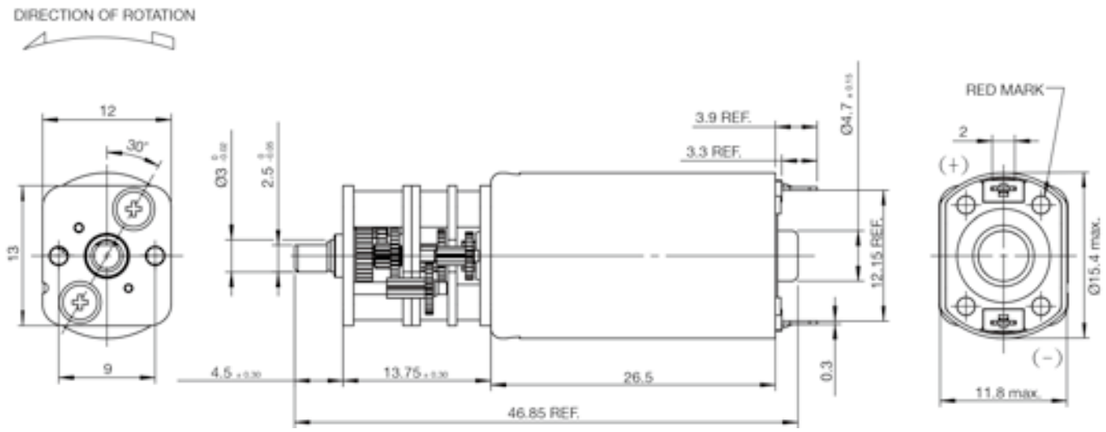

GEAR MOTOR | ∅24

Metal Gear

	unit	CFM2430013	CFM2430006
Dimension	mm	ϕ24*30	ϕ24*30
Standard Operating Conditions			
Nominal Voltage	V	12.0	12.0
Operating Range	V	8.0~15.0	8.0~15.0
Rated Load	mNm	5000	490.33
Direction of Rotation		-	CW&CCW
Operating Temperature Range	°C	-20~+80	-20~80
Storage Temperature Range	°C	-30~+70	-30~+70
Mechanical Specification			
No-Load Current	mA	100	100
No-Load Speed	rpm	136	136
Rated-Load Current	mA	1500	1500
Rated-Load Speed	rpm	80	80
Stall Torque	mNm	9996	980.66
Stall Current	mA	3000	-
Output Power	W	18	-
Mechanical Noise	dB	60	-
Gearhead			
Gearhead Length	mm	18.1	18.1
Reduction Ratio		1:77	1:77
Gearhead Type		Spur	Spur
Number Of Stages		3	3

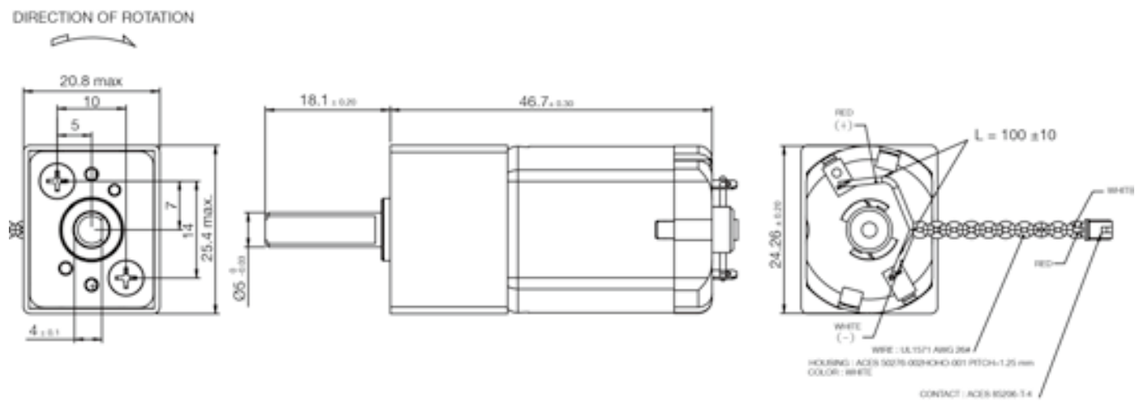

GEAR MOTOR | ∅08

Plastic Gear

	unit	BFP0814001	BFP0814005
Dimension	mm	Φ8*14L	Φ8*14L
Standard Operating Conditions			
Nominal Voltage	V	4.0	5.6
Operating Range	V	2.0~5.0	2.0~6.0
Rated Load	mNm	6	10
Direction of Rotation		CW&CCW	CW&CCW
Operating Temperature Range	°C	-10~+70	-10~+70
Storage Temperature Range	°C	-40~+85	-40~+86
Mechanical Specification			
No-Load Current	mA	45	60
No-Load Speed	rpm	94	180
Rated-Load Current	mA	100	180
Rated-Load Speed	rpm	74	140
Stall Torque	mNm	190	380
Stall Current	mA	270	480
Output Power	W	0.40	1.01
Mechanical Noise	dB		
Gearhead			
Gearhead Length	mm	-	-
Reduction Ratio		-	-
Gearhead Type		Spur	Spur
Number Of Stages		3	2

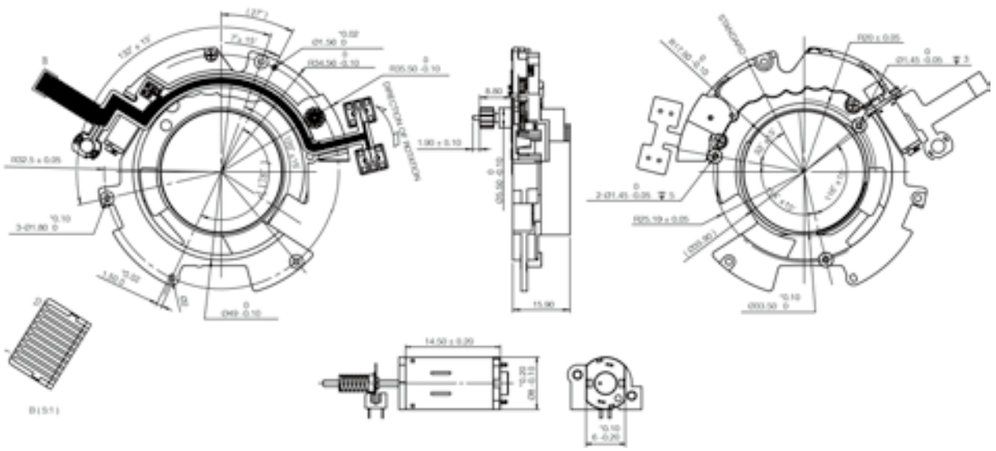

GEAR MOTOR | ∅10

Plastic Gear

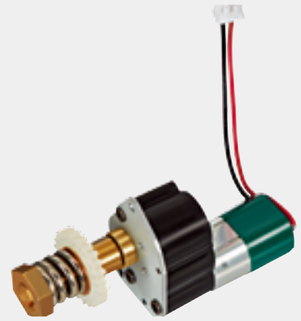

	unit	BFP1015021
Dimension	mm	Φ10*15L
Standard Operating Conditions		
Nominal Voltage	V	5.0
Operating Range	V	4.0~6.0
Rated Load	mNm	25.0
Direction of Rotation		CW&CCW
Operating Temperature Range	°C	-20~+60
Storage Temperature Range	°C	-20~+60
Mechanical Specification		
No-Load Current	mA	25
No-Load Speed	rpm	25.2
Rated-Load Current	mA	-
Rated-Load Speed	rpm	-
Slip Torque	mNm	60
Slip Current	mA	70
Output Power	W	0.63
Mechanical Noise	dB	-
Gearhead		
Gearhead Length	mm	18.4
Reduction Ratio		1:359.95
Gearhead Type		Spur
Number Of Stages		2

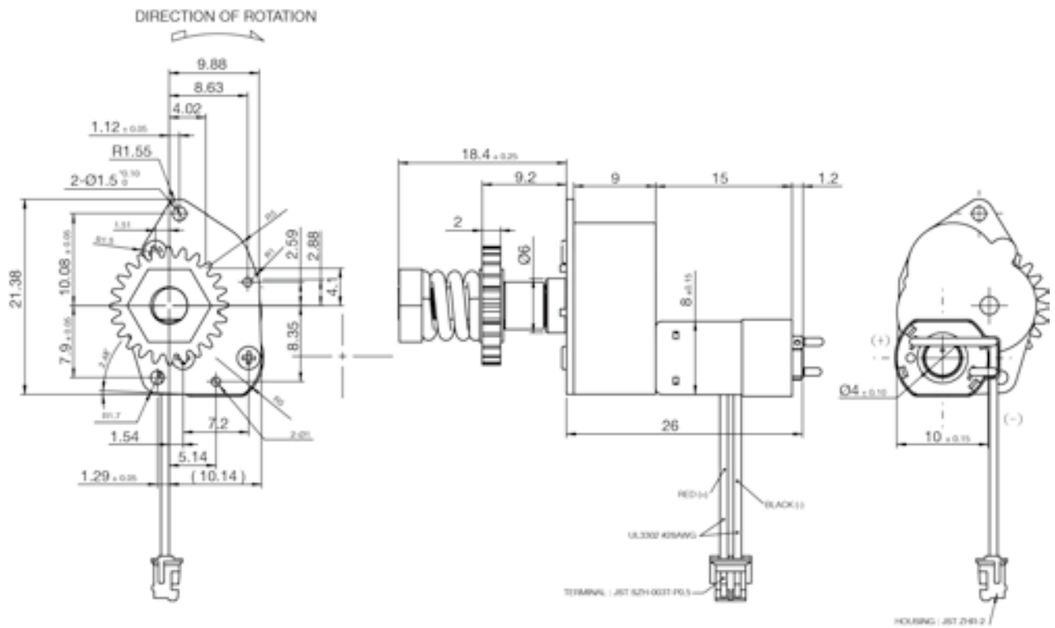

GEAR MOTOR | ∅12

Plastic Gear

	unit	BFP1215001	HOA0001001
Dimension	mm	Φ12*15L	Φ16.6*47L
Standard Operating Conditions			
Nominal Voltage	V	5.0	4.5
Operating Range	V	3.0~7.0	4.5~6.0
Rated Load	mNm	-	-
Direction of Rotation		CW&CCW	-
Operating Temperature Range	°C	-10~+60	-35~+66
Storage Temperature Range	°C	-30~+70	-35~+70
Mechanical Specification			
No-Load Current	mA	100	-
No-Load Speed	rpm	8.5	-
Rated-Load Current	mA	300	-
Rated-Load Speed	rpm	7.5 / 6.3	-
Stall Torque	mNm	7140	-
Stall Current	mA	150	-
Output Power	W	1.50	-
Mechanical Noise	dB	60	-
Gearhead			
Gearhead Length	mm	-	-
Reduction Ratio		1:1993.06	-
Gearhead Type		Spur	-
Number Of Stages			

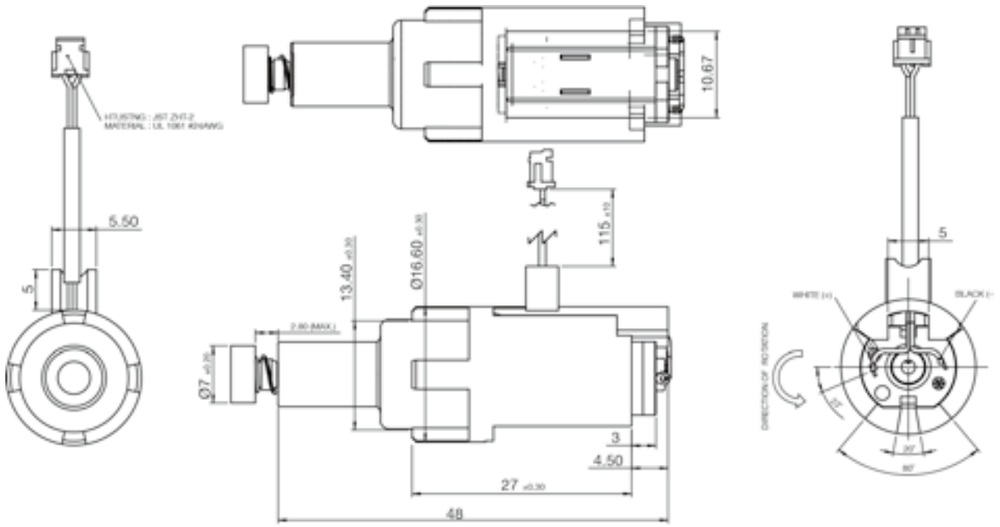

GEAR MOTOR | ∅14

Plastic Gear

	unit	BFP1418001	BFP1420001
Dimension	mm	Φ14*18L	Φ14*20L
Standard Operating Conditions			
Nominal Voltage	V	3.5	5.0
Operating Range	V	1.5~5.0	4.0~6.0
Rated Load	mNm	8	40
Direction of Rotation		CW&CCW	CW&CCW
Operating Temperature Range	°C	-10~+70	-10~+60
Storage Temperature Range	°C	-40~+80	-20~+60
Mechanical Specification			
No-Load Current	mA	53	35
No-Load Speed	rpm	64.1	22.33
Rated-Load Current	mA	-	-
Rated-Load Speed	rpm	-	-
Slip Torque	mNm	302	70
Slip Current	mA	192	75
Output Power	W	0.29	0.38
Mechanical Noise	dB	52	60
Gearhead			
Gearhead Length	mm	-	18.4
Reduction Ratio		1:70	1:224
Gearhead Type		Spur	Spur
Number Of Stages		3	4

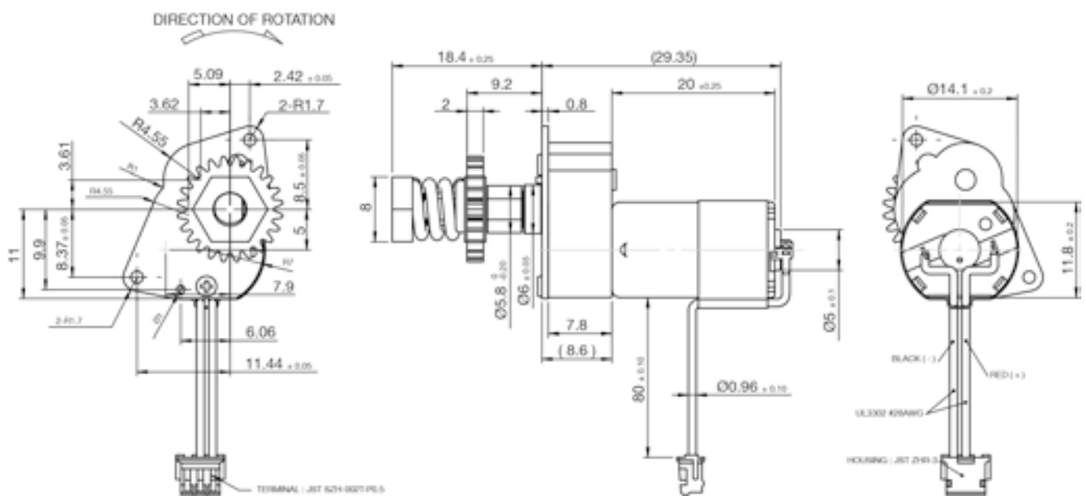

GEAR MOTOR | Ø15

Plastic Gear

	unit	BFP1526001						
Dimension	mm	27.6*30*56.8						
Standard Operating Conditions								
Nominal Voltage	V	5.0						
Operating Range	V	4.5~6.0						
Rated Load	mNm	50						
Direction of Rotation		CW&CCW						
Operating Temperature Range	°C	-20~+60						
Storage Temperature Range	°C	+20~+60						
Mechanical Specification								
No-Load Current	mA	40						
No-Load Speed	rpm	11.2						
Rated-Load Current	mA	-						
Rated-Load Speed	rpm	-						
Stall Torque	mNm	714						
Stall Current	mA	55						
Output Power	W	0.45						
Mechanical Noise	dB	51						
Gearhead								
Gearhead Length	mm	19.7						
Reduction Ratio		1:358.5						
Gearhead Type		Spur						
Number Of Stages		5						

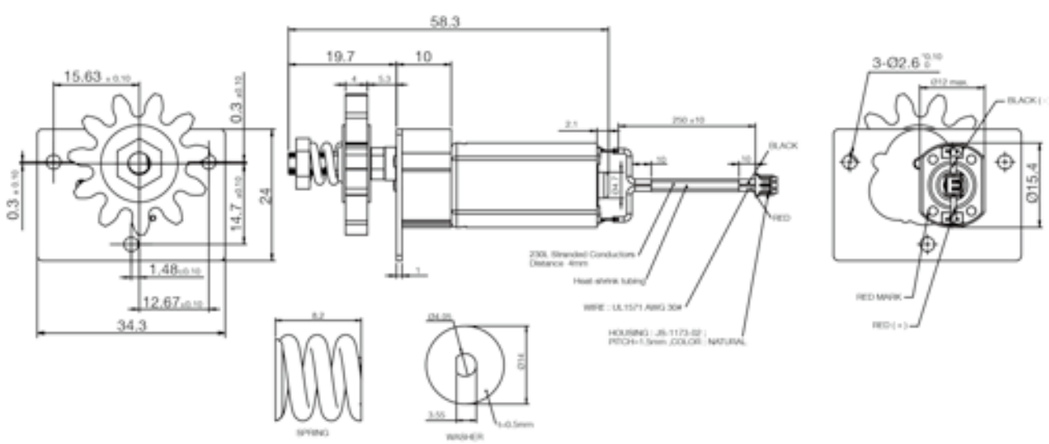

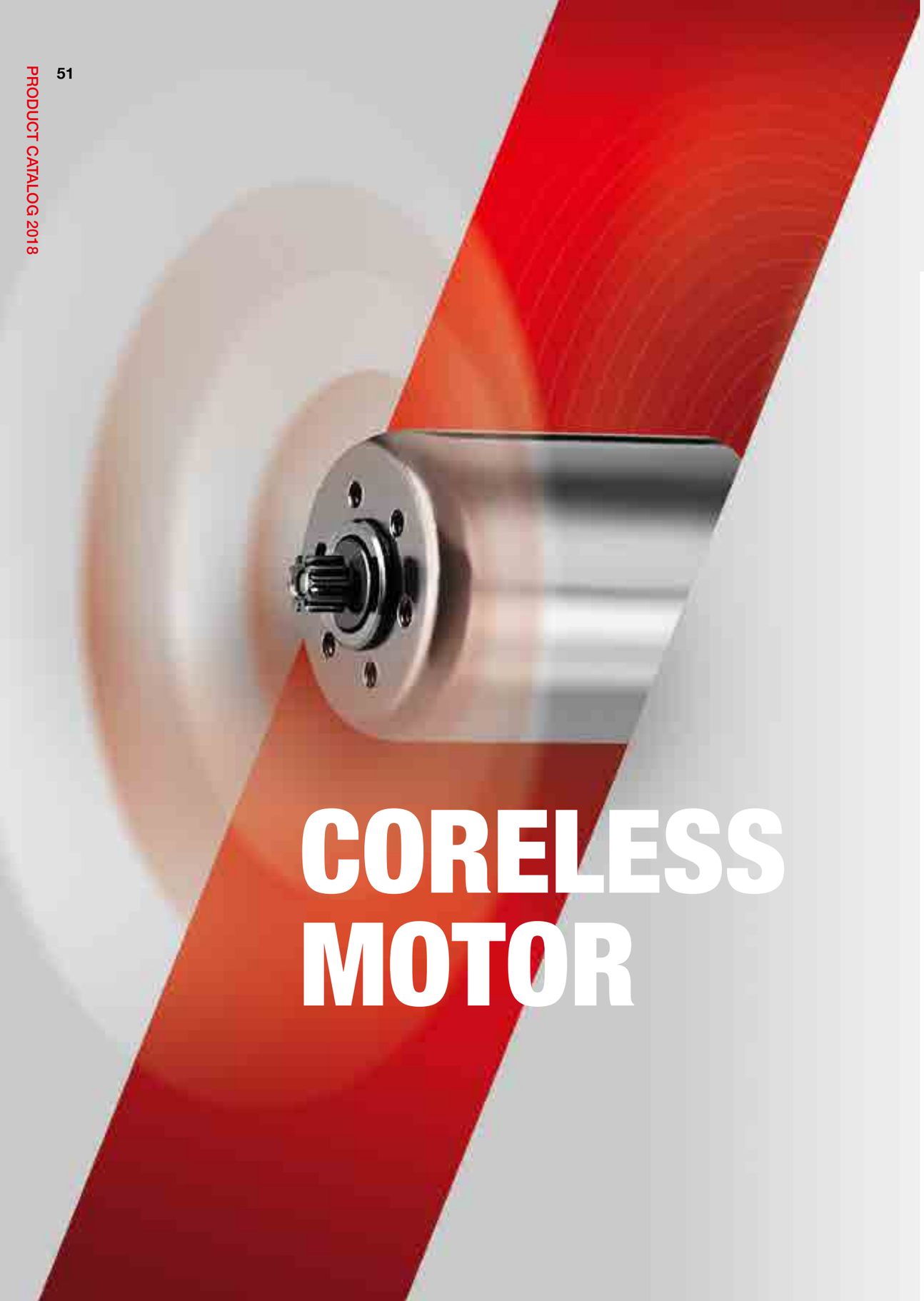

CORELESS MOTOR

CORELESS MOTOR | ∅17

Carbon Brush

	unit	CCG1718001
		Pinion Gear
Standard Operating Conditions		
Nominal Voltage	V	5.5
Operating Range	V	3.0~6.0
Rated Load	mNm	0.98
Direction of Rotation		CW &CCW
Operating Temperature Range	°C	-10~+60
Storage Temperature Range	°C	-20~+80
Electrical Characteristic		
No-Load Current	mA	90
No-Load Speed	rpm	1500
Rated Current	mA	450
Rated Speed	rpm	13500
Stall Torque	mNm	80
Max. Starting Voltage	V	0.5
Max. Starting Current	mA	2900
Rotor Resistance	Ω	2.1
Insulation Resistance	Mohm	10
Weight of Motor	g	-

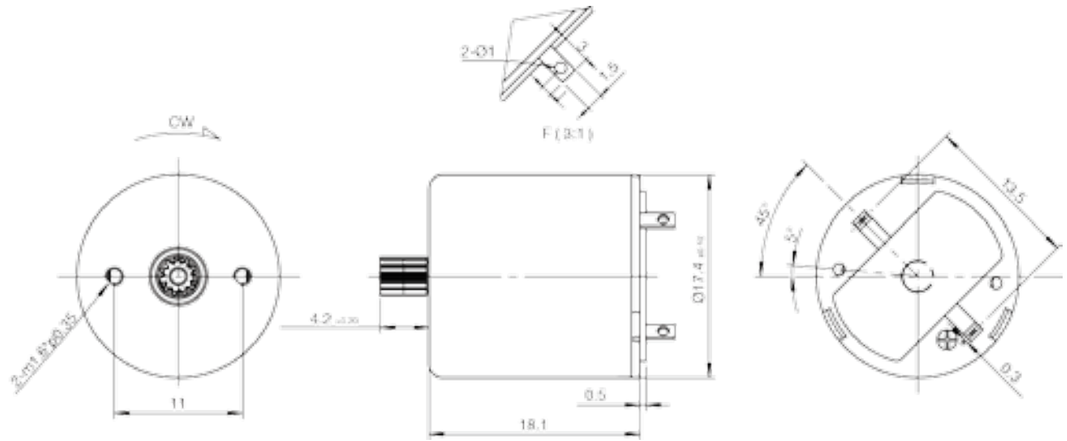

CORELESS MOTOR | ∅08

Metal Brush

	unit	BCG0819004
		Pinion Gear
Standard Operating Conditions		
Nominal Voltage	V	3.0
Operating Range	V	2.0~4.0
Rated Load	mNm	0.44
Direction of Rotation		CW&CCW
Operating Temperature Range	°C	-10~+60
Storage Temperature Range	°C	-20~+80
Electrical Characteristic		
No-Load Current	mA	15
No-Load Speed	rpm	9700
Rated Current	mA	235
Rated Speed	rpm	2200
Stall Torque	mNm	0.57
Max. Starting Voltage	V	1.0
Max. Starting Current	mA	300
Rotor Resistance	Ω	11.8
Insulation Resistance	Mohm	1.0
Weight of Motor	g	4.74

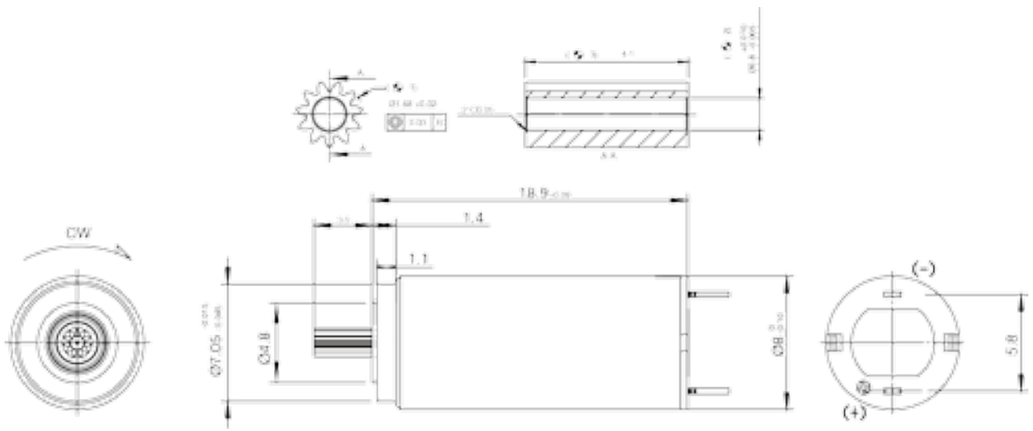

CORELESS MOTOR | ∅10

Metal Brush

	unit	BCG1015007
		Pinion Gear
Standard Operating Conditions		
Nominal Voltage	V	6.0
Operating Range	V	3~7
Rated Load	mNm	0.294
Direction of Rotation		CW &CCW
Operating Temperature Range	°C	-10~+60
Storage Temperature Range	°C	-20~+80
Electrical Characteristic		
No-Load Current	mA	15
No-Load Speed	rpm	22500
Rated Current	mA	192
Rated Speed	rpm	14600
Stall Torque	mNm	1.20
Max. Starting Voltage	V	0.5
Starting Current	mA	510
Rotor Resistance	Ω	11.7
Insulation Resistance	Mohm	1.0
Weight of Motor	g	5.54

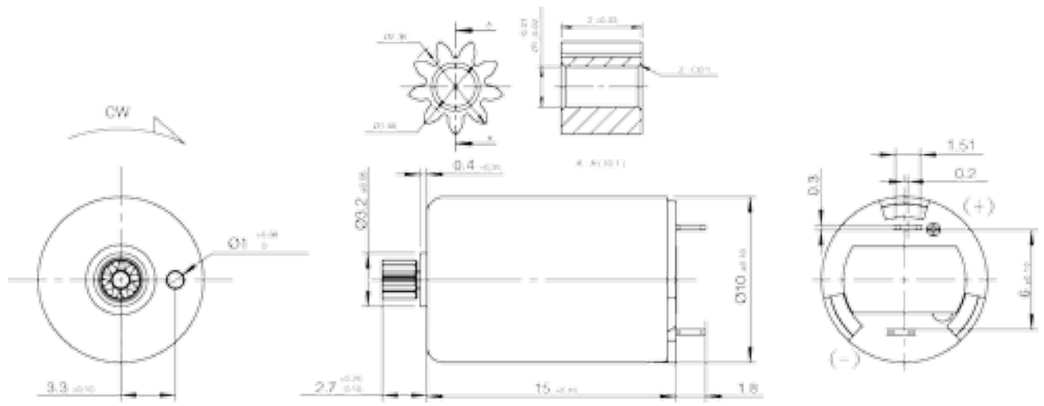

CORELESS MOTOR | ∅12

Metal Brush

	unit	BCG1215008	BCG1220005
		Pinion Gear	Pinion
Standard Operating Conditions			
Nominal Voltage	V	6.0	7.4
Operating Range	V	3.0~7.0	6.0~8.4
Rated Load	mNm	0.58	1.764
Direction of Rotation		CW&CCW	CW&CCW
Operating Temperature Range	°C	-10~+60	-10~+60
Storage Temperature Range	°C	-20~+80	-20~+80
Electrical Characteristic			
No-Load Current	mA	80	50
No-Load Speed	rpm	27500	20000
Rated Current	mA	660	950
Rated Speed	rpm	19500	14000
Stall Torque	mNm	1.96	5.88
Max. Starting Voltage	V	0.5	0.3
Max. Starting Current	mA	2000	3000
Rotor Resistance	Ω	4.1	2.0
Insulation Resistance	Mohm	10	10
Weight of Motor	g	7.63	10.47

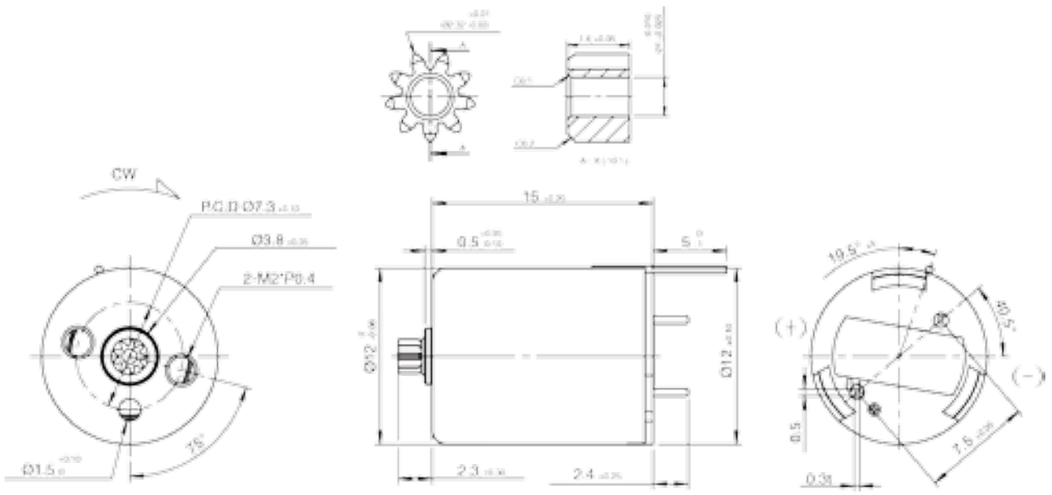

CORELESS MOTOR | ∅13

Metal Brush

	unit	BEG1322001
		Pinion Gear
Standard Operating Conditions		
Nominal Voltage	V	6.0
Operating Range	V	6.0~8.4
Rated Load	mNm	11767.97
Direction of Rotation		CW &CCW
Operating Temperature Range	°C	-10~+60
Storage Temperature Range	°C	-20~+80
Electrical Characteristic		
No-Load Current	mA	15
No-Load Speed	rpm	8500
Rated Current	mA	-
Rated Speed	rpm	-
Stall Torque	mNm	15690.64
Max. Starting Voltage	V	0.3
Max. Starting Current	mA	0.2
Rotor Resistance	Ω	28
Insulation Resistance	Mohm	10
Weight of Motor	g	-

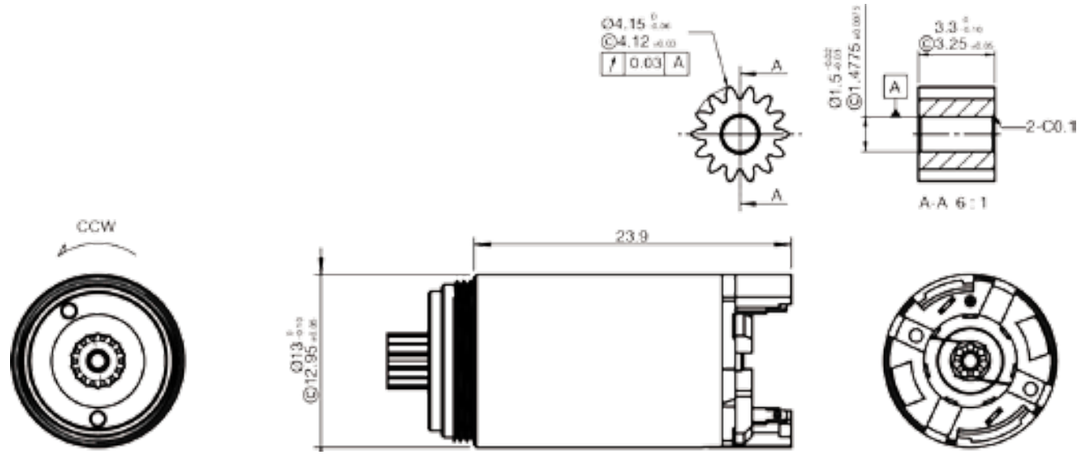

CORELESS MOTOR | ∅15

Metal Brush

	unit	BCG1515001	BCG1519001
		Pinion Gear	Pinion Gear
Standard Operating Conditions			
Nominal Voltage	V	7.4	3.0
Operating Range	V	6.0~8.4	2.5~4.5
Rated Load	mNm	8.4	2.3
Direction of Rotation		CW&CCW	CW&CCW
Operating Temperature Range	°C	-10~+60	-10~+60
Storage Temperature Range	°C	-20~+80	-20~+80
Electrical Characteristic			
No-Load Current	mA	85	30
No-Load Speed	rpm	30000	6600
Rated Current	mA	420	70
Rated Speed	rpm	27800	6000
Stall Torque	mNm	6.86	0.9
Max. Starting Voltage	V	0.5	0.5
Max. Starting Current	mA	5000	800
Rotor Resistance	Ω	1.5	5.0
Insulation Resistance	Mohm	10	10
Weight of Motor	g	11.2	15.9

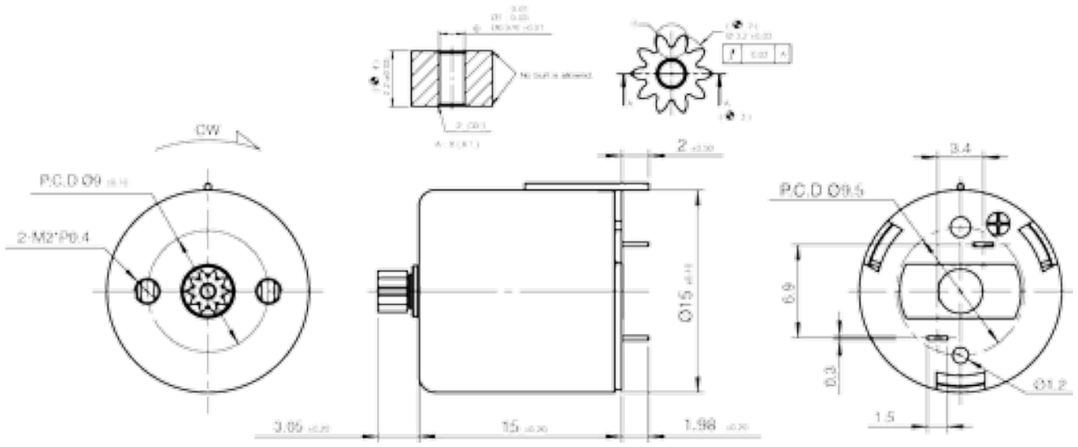

CORELESS MOTOR | ∅17

Metal Brush

	unit	BCG1715010	BCG1718065	BCG1722008
		Pinion Gear	Pinion Gear	Pinion Gear
Standard Operating Conditions				
Nominal Voltage	V	4.8	6.0	12.0
Operating Range	V	3.6~6.0	5.5~6.5	9.0~14.0
Rated Load	mNm	1.17	2.15	4.31
Direction of Rotation		CW&CCW	CW&CCW	CW&CCW
Operating Temperature Range	°C	-10~+60	-10~+60	-10~+60
Storage Temperature Range	°C	-20~+80	-20~+80	-20~+80
Electrical Characteristic				
No-Load Current	mA	105	100	90
No-Load Speed	rpm	16000	19000	21000
Rated Current	mA	580	1070	1430
Rated Speed	rpm	11700	13100	16500
Stall Torque	mNm	3.92	8.3	20.58
Max. Starting Voltage	V	0.5	0.5	0.5
Max. Starting Current	mA	2200	3800	6500
Rotor Resistance	Ω	2.5	1.85	1.9
Insulation Resistance	Mohm	10	10	10
Weight of Motor	g	16	19.89	24.76

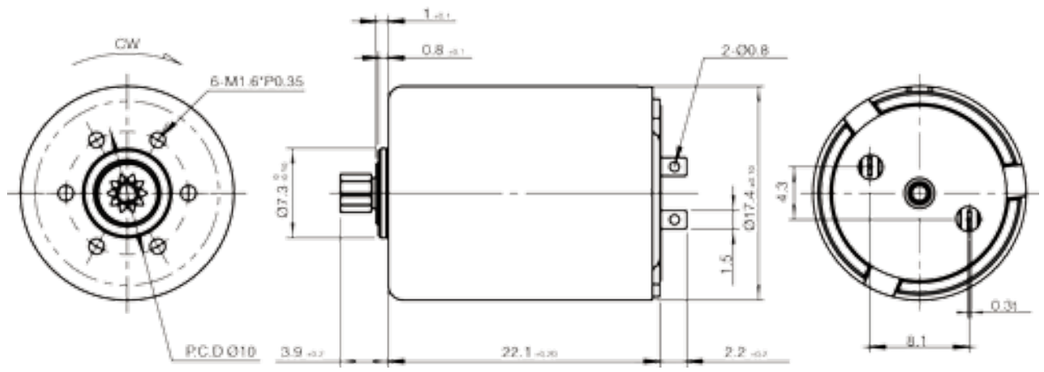

CORELESS MOTOR | ∅20

Metal Brush

	unit	BCG2020002	BCG2020004
		Pinion Gear	Pinion Gear
Standard Operating Conditions			
Nominal Voltage	V	12.0	7.4
Operating Range	V	11.0~13.0	6.0~8.4
Rated Load	mNm	6.76	5.88
Direction of Rotation		CW&CCW	CW&CCW
Operating Temperature Range	°C	-10~+60	-10~+60
Storage Temperature Range	°C	-20~+80	-20~+80
Electrical Characteristic			
No-Load Current	mA	100	65
No-Load Speed	rpm	19500	17000
Rated Current	mA	1450	1800
Rated Speed	rpm	16500	12000
Stall Torque	mNm	22.54	19.6
Max. Starting Voltage	V	0.5	0.5
Starting Current	mA	6000	6200
Rotor Resistance	Ω	1.30	1.27
Insulation Resistance	Mohm	10	10
Weight of Motor	g	31.67	32

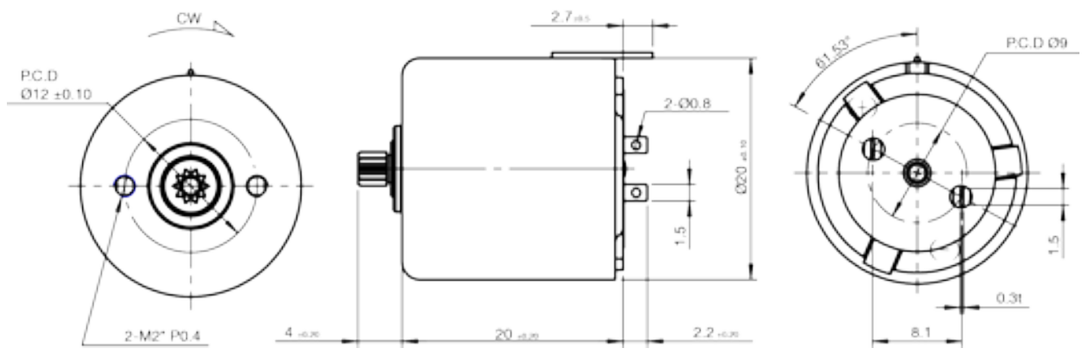

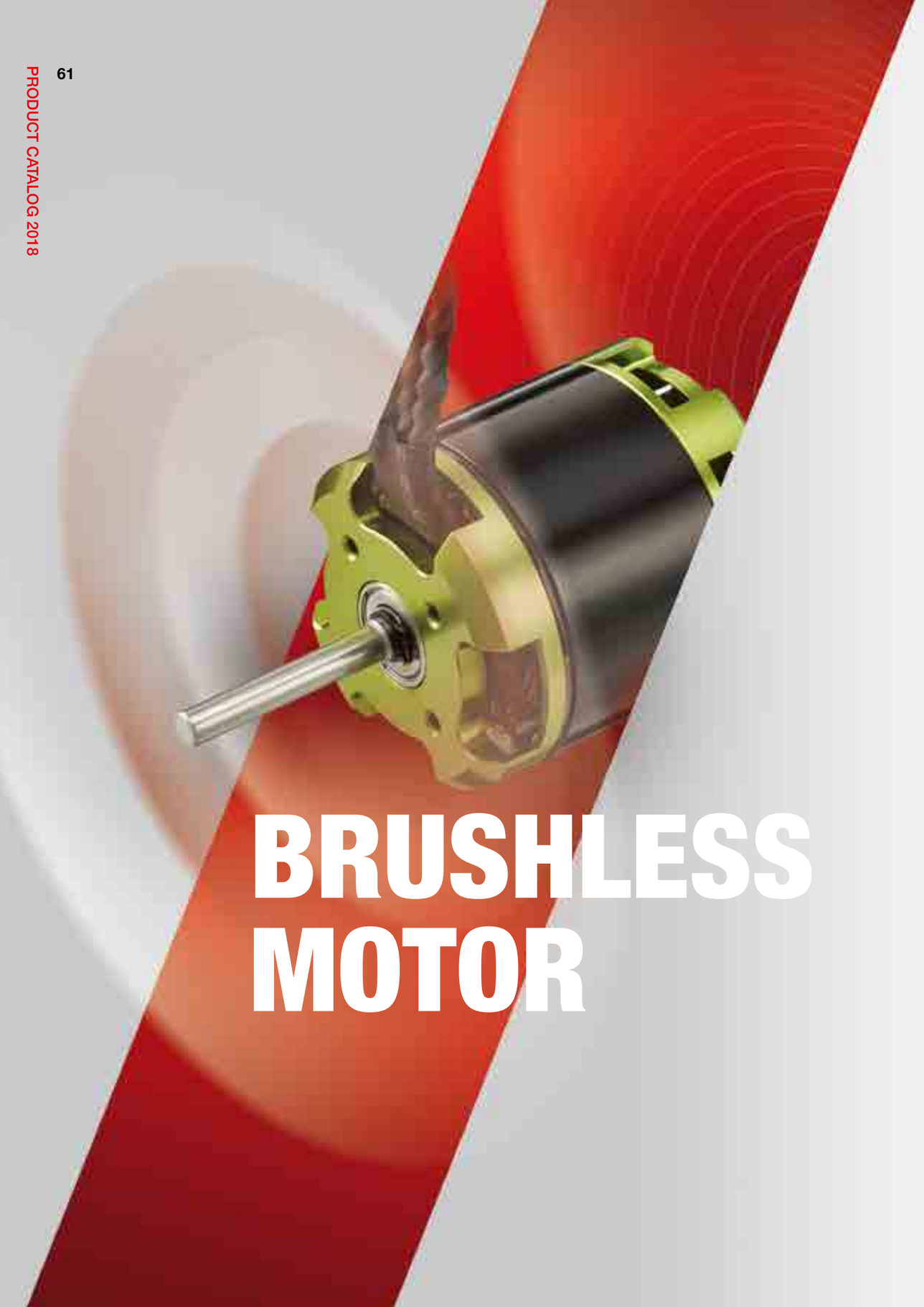

BRUSHLESS MOTOR

BRUSHLESS MOTOR | ∅20

Inner Type

	unit	INA2040002
Standard Operating Conditions		
Nominal Voltage	V	12
Operating Range	V	7.4~12.6
Direction of Rotation		CCW /CW
Number of Phases		3
Operating Temperature Range	°C	0~50
Storage Temperature Range	°C	-20~60
Electrical Characteristic		
No-Load Current	A	1.4
No-Load Speed	rpm	45300
Constant Torque	mNm/A	2.618
Constant Speed	rpm/V	3800
Stall Torque	mNm	273.5
Stall Current	A	106.11
Max. Output Power	W	320
Max. Efficiency	%	81.8
Weight of Motor	g	62

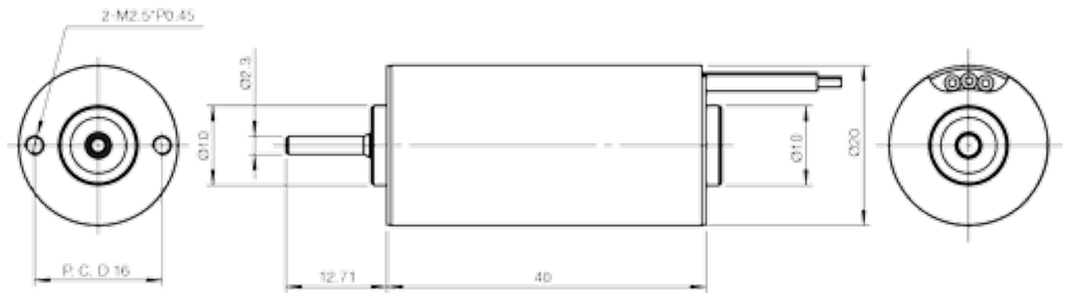

BRUSHLESS MOTOR | Ø22

Inner Type

	unit	INA2236006
Standard Operating Conditions		
Nominal Voltage	V	11.1
Operating Range	V	7.4~12.6
Direction of Rotation		CCW /CW
Number of Phases		3
Operating Temperature Range	°C	0~50
Storage Temperature Range	°C	-20~60
Electrical Characteristic		
No-Load Current	A	0.6
No-Load Speed	rpm	44760
Constant Torque	mAm/A	2.46
Constant Speed	rpm/V	4000
Stall Torque	mNm	189.9
Stall Current	A	77.39
Max. Output Power	W	222
Max. Efficiency	%	87.4
Weight of Motor	g	53

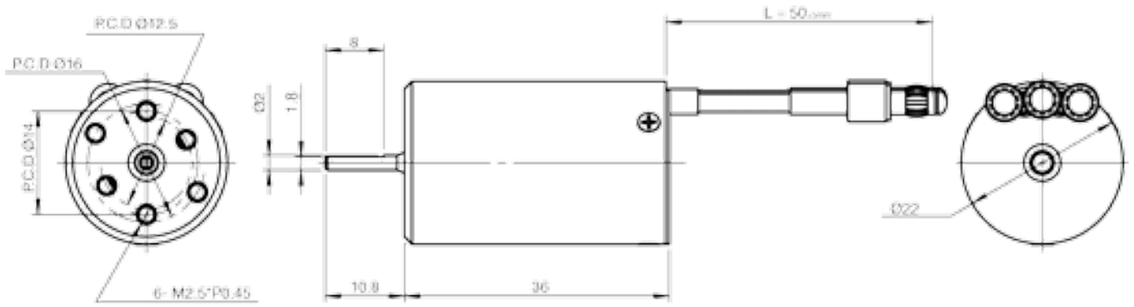

BRUSHLESS MOTOR | Ø28

Inner Type

	unit	INA2848003
Standard Operating Conditions		
Nominal Voltage	V	7.4
Operating Range	V	7.4~12.6
Direction of Rotation		CW/CCW
Number of Phases		3
Operating Temperature Range	°C	0~50
Storage Temperature Range	°C	-20~60
Electrical Characteristic		
No-Load Current	A	2.3
No-Load Speed	rpm	30780
Constant Torque	mNm/A	2.37
Constant Speed	rpm/V	4100
Stall Torque	mNm	498.3
Stall Current	A	218.14
Max. Output Power	W	400
Max. Efficiency	%	81.7
Weight of Motor	g	135

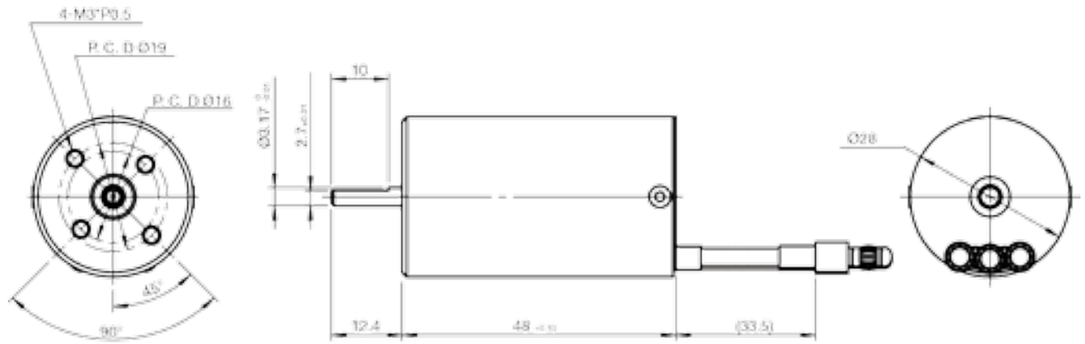

BRUSHLESS MOTOR | ∅36

Inner Type

	unit	INA3650002	INA3650019	INA3361003
Standard Operating Conditions				
Nominal Voltage	V	7.4	7.4	11.1
Operating Range	V	7.4~12.6	7.4~16.8	11.1~16.8
Direction of Rotation		CW/CCW	CW/CCW	CW/CCW
Number of Phases		3	3	3
Operating Temperature Range	°C	0~50	0~50	0~50
Storage Temperature Range	°C	-20~60	-20~60	-20~60
Electrical Characteristic				
No-Load Current	A	2	2.1	0.9
No-Load Speed	rpm	25440	37260	18462
Constant Torque	mNm/A	2.82	1.92	5.87
Constant Speed	rpm/V	3500	5000	1700
Stall Torque	mNm	492	353.2	1095.7
Stall Current	A	180.39	187.30	188.90
Max. Output Power	W	327	344	528
Max. Efficiency	%	80.2	81.2	88.2
Weight of Motor	g	220	183	265

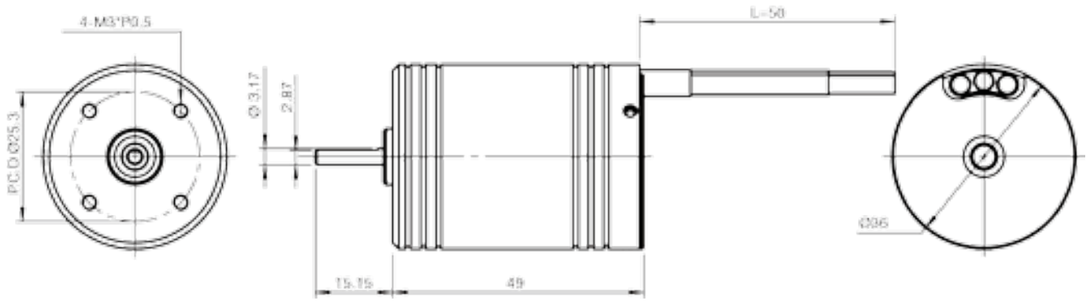

BRUSHLESS MOTOR | ∅29

Outter Type

	unit	OMA2940001	OMA2940002
Standard Operating Conditions			
Nominal Voltage	V	11.1	11.1
Operating Range	V	7.4~14.8	7.4~14.8
Direction of Rotation		CW/CCW	CW/CCW
Number of Phases		3	3
Operating Temperature Range	°C	0~50	0~50
Storage Temperature Range	°C	-20~60	-20~60
Electrical Characteristic			
No-Load Current	A	3	2.6
No-Load Speed	rpm	40200	38400
Constant Torque	mNm/A	27	29
Constant Speed	rpm/V	3500	3500
Stall Torque	mNm	273	398
Stall Current	A	101	135
Max. Output Power	W	1121.1	1498.5
Max. Efficiency	%	72	80
Weight of Motor	g	77.9	77.9

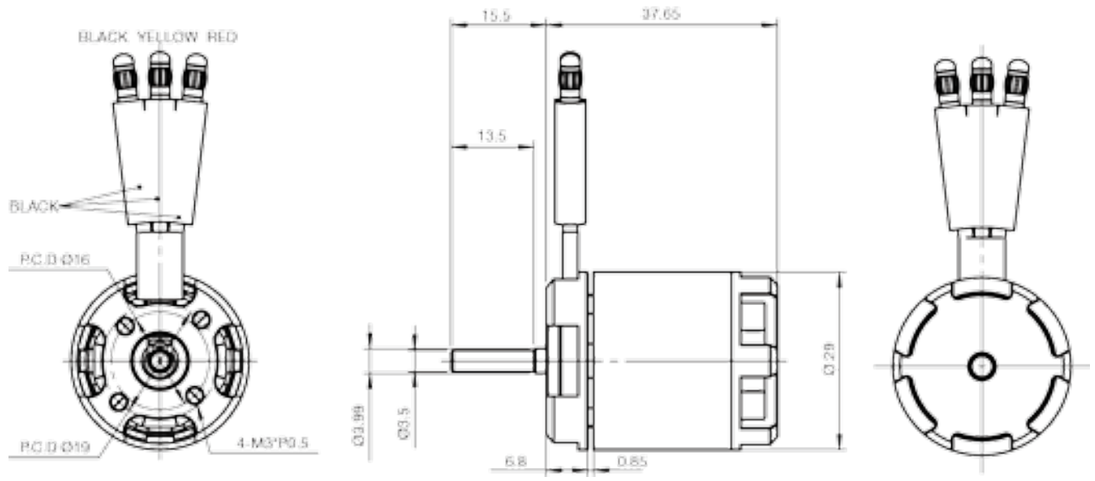

BRUSHLESS MOTOR | ∅37

Outter Type

	unit	OMA3750002	OMA3750008	OMA3750009
Standard Operating Conditions				
Nominal Voltage	V	22.2	22.2	22.2
Operating Range	V	11.1~22.2	11.1~22.2	11.1~22.2
Direction of Rotation		CW/CCW	CW/CCW	CW/CCW
Number of Phases		3	3	3
Operating Temperature Range	°C	0~50	0~50	0~50
Storage Temperature Range	°C	-20~60	-20~60	-20~60
Electrical Characteristic				
No-Load Current	A	5.3	6.6	4.9
No-Load Speed	rpm	29400	31350	27000
Constant Torque	mNm/A	81	70	88
Constant Speed	rpm/V	1300	1600	1200
Stall Torque	mNm	3430	2415	2815
Stall Current	A	425	353	325
Max. Output Power	W	9435	7837	7215
Max. Efficiency	%	89	85	86
Weight of Motor	g	198	195	187

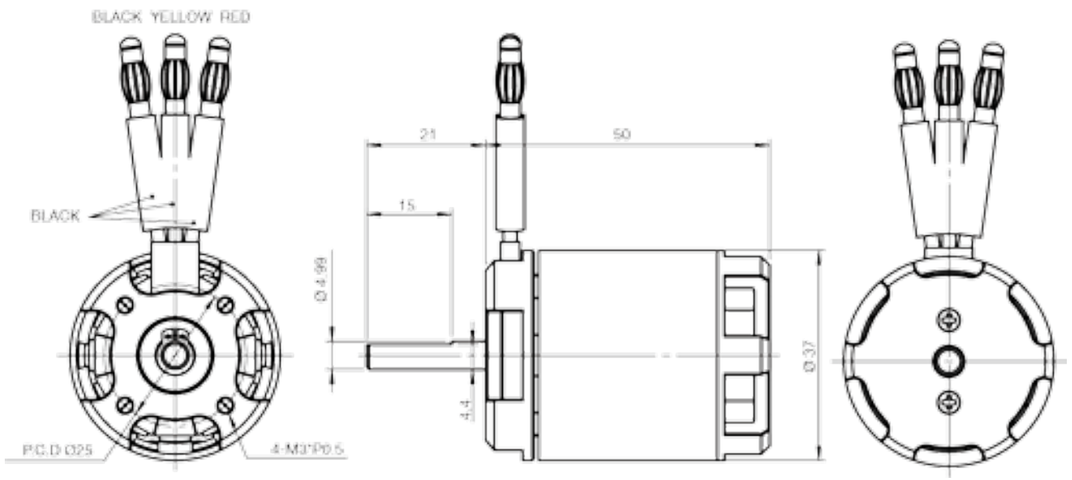

BRUSHLESS MOTOR | ∅40

Outter Type

	unit	OMA4050013	OMA4050017	OMA4050018
Standard Operating Conditions				
Nominal Voltage	V	22.2	22.2	22.2
Operating Range	V	11.1~22.2	11.1~22.2	11.1~22.2
Direction of Rotation		CW/CCW	CW/CCW	CW/CCW
Number of Phases		3	3	3
Operating Temperature Range	°C	0~50	0~50	0~50
Storage Temperature Range	°C	-20~60	-20~60	-20~60
Electrical Characteristic				
No-Load Current	A	6.2	9.2	5.3
No-Load Speed	rpm	28500	31824	26250
Constant Torque	mNm/A	81	67	89
Constant Speed	rpm/V	1300	1600	1200
Stall Torque	mNm	3430	3706	3221
Stall Current	A	427	475	364
Max. Output Power	W	9479	10545	8081
Max. Efficiency	%	84	82	85
Weight of Motor	g	215	215	214

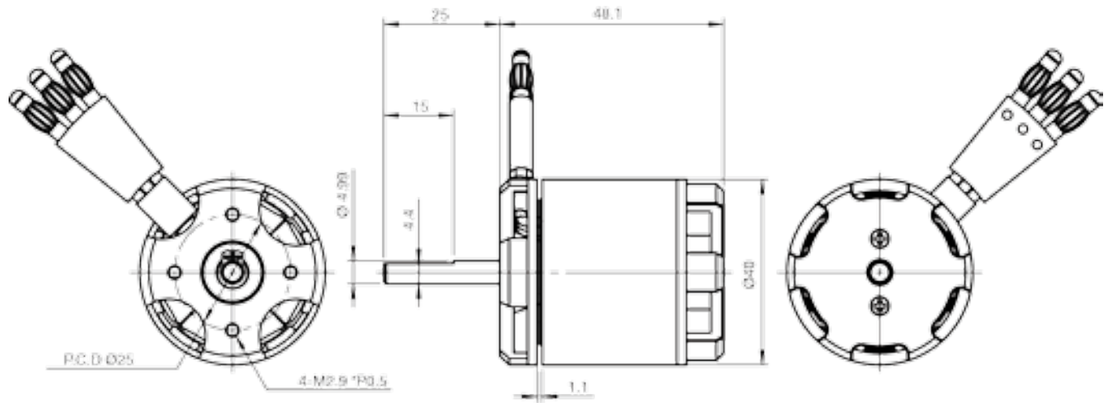

BRUSHLESS MOTOR | ∅47

Outter Type

	unit	OMA4750001	OMA4760002	OMA476003	OMA4760004	OMA476005
Standard Operating Conditions						
Nominal Voltage	V	22.2	22.2	44.4	46	44.4
Operating Range	V	11.1~22.2	11.1~22.2	11.1~44.4	11.1~46	11.1~44.4
Direction of Rotation		CW/CCW	CW/CCW	CW/CCW	CW/CCW	CW/CCW
Number of Phases		3	3	3	3	3
Operating Temperature Range	°C	0~50	0~50	0~50	0~50	0~50
Storage Temperature Range	°C	-20~+60	-20~+60	-20~+60	-20~+60	-20~+60
Electrical Characteristic						
No-Load Current	A	6	9.3	3.1	3.3	3.1
No-Load Speed	rpm	25650	26694	21900	24552	21900
Constant Torque	mNm/A	91	89	211	200	211
Constant Speed	rpm/V	1200	1200	500	530	530
Stall Torque	mNm	1528	4560	8728	8822	8729
Stall Current	A	168	517	414	442	414
Max. Output Power	W	3730	11477	18382	20332	18382
Max. Efficiency	%	76	85	90	92	90
Weight of Motor	g	272	339	339	335	339

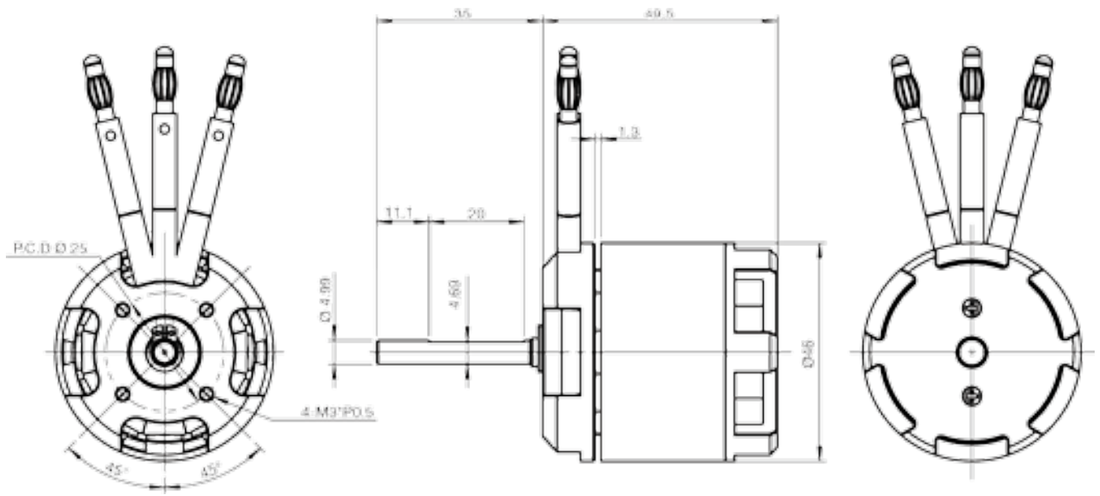

BRUSHLESS MOTOR | ∅50

Outter Type

	unit	OMA5055015	OMA5065013	OMA50605014	OMA5065017	OMA5065018
Standard Operating Conditions						
Nominal Voltage	V	46	44.4	46	46	46
Operating Range	V	22.2~46	22.2~44.4	11.1~46	11.1~46	11.1~46
Direction of Rotation		CW/CCW	CW/CCW	CW/CCW	CW/CCW	CW/CCW
Number of Phases		3	3	3	3	3
Operating Temperature Range	°C	0~50	0~50	0~50	0~50	0~50
Storage Temperature Range	°C	-20~+60	-20~+60	-20~+60	-20~+60	-20~+60
Electrical Characteristic						
No-Load Current	A	3.9	3.3	4.2	4.7	5.3
No-Load Speed	rpm	25650	20400	22500	23994	24864
Constant Torque	mNm/A	178	170	202	189	186
Constant Speed	rpm/V	550	450	500	530	550
Stall Torque	mNm	9140	5140	11333	19277	13876
Stall Current	A	513	303	569	1035	751
Max. Output Power	W	23598	13453	26174	47610	34546
Max. Efficiency	%	86	65	85	87	87
Weight of Motor	g	347	443	463	467	455

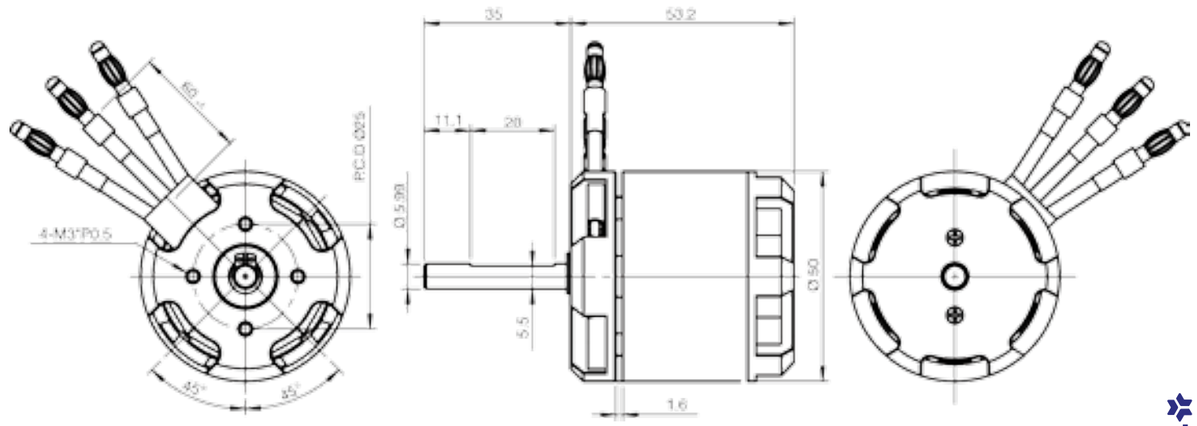

PUMP MOTOR

PUMP MOTOR | ∅14

Air Type

	unit	TPM1420002						
Parameters								
Nominal Voltage	V	3						
Medium		Air						
Free Flow	ml/min	>800						
Max. Current	mA	<400						
Max. Pressure	mmHg	>350						
Noise	dB	<65						
Others								
Life Test		30,000 times (DC3V; 1cycle: connect to a 100cc pneumatic cylinder on 9s, off 5s)						
Working Environment		-20~60°C,80%RH						

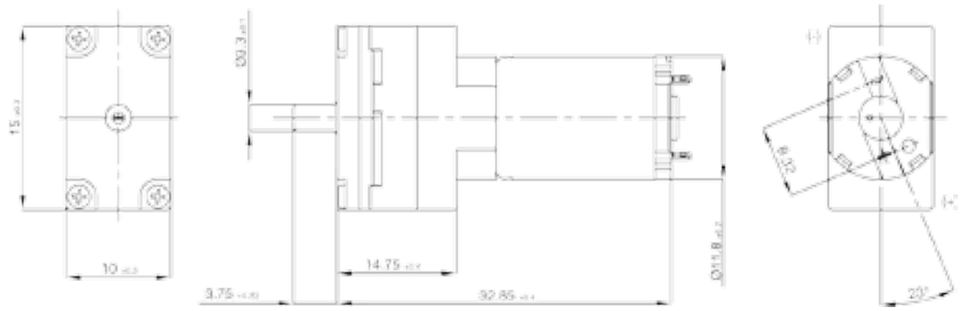

PUMP MOTOR | ∅27

Air Type

	unit	BPO2430019
Parameters		
Nominal Voltage	V	6
Medium		Air
Free Flow	ml/min	>1600
Max. Current	mA	<400
Max. Pressure	mmHg	>400
Noise	dB	<55
Others		
Life Test		30,000 times (DC3V; 1cycle: connect to a 500cc pneumatic cylinder on 9s, off 8s)
Working Environment		-20~60°C,80%RH

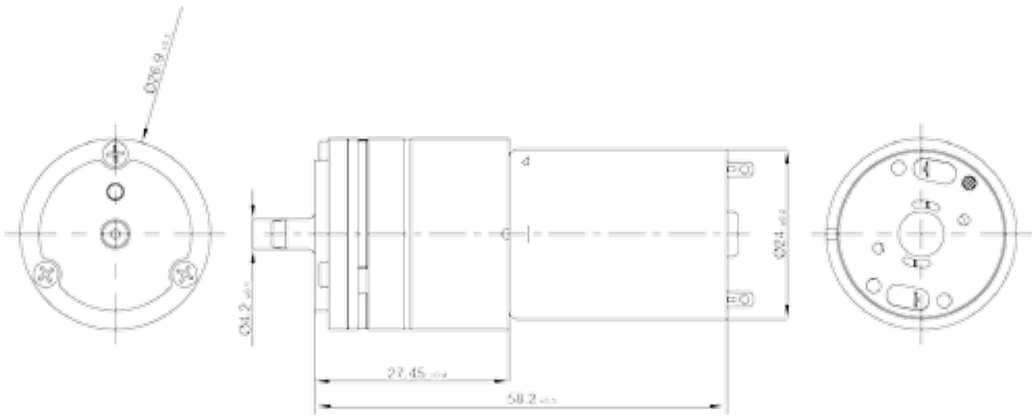

PUMP MOTOR | ∅32

Air Type

	unit	TPM3261001
Parameters		
Nominal Voltage	V	12
Medium		Air
Free Flow	ml/min	>3500
Max. Current	mA	<390
Max. Pressure	mmHg	>450
Noise	dB	<65
Others		
Life Test		50,000 times (DC12V; 1cycle: connect to a 500cc pneumatic cylinder on 9s, off 8s)
Working Environment		-20~60°C,80%RH

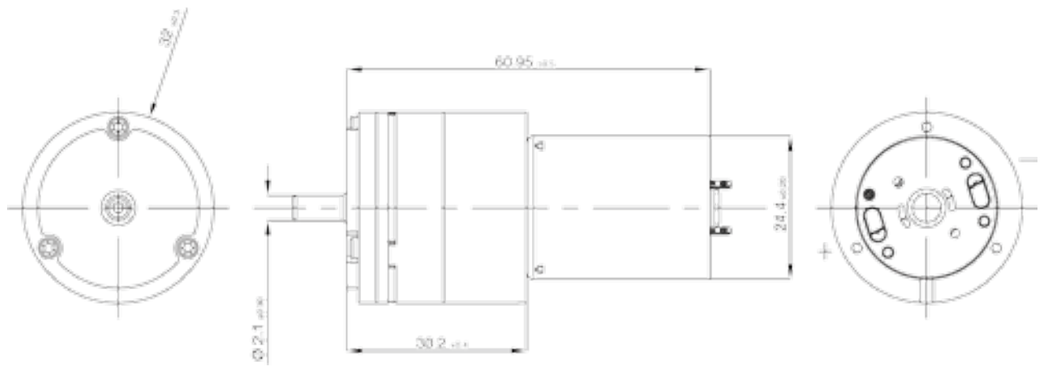

PUMP MOTOR | ∅36

Air Type

	unit	TPM3657001	TPM3657003					
Parameters								
Nominal Voltage	V	12	24					
Medium		Air	Air					
Free Flow	ml/min	>15000	>15000					
Max. Current	mA	<15000	<800					
Max. Pressure	mmHg	>500	>500					
Noise	dB	<65	<65					
Others								
Life Test		100,000 times (DC12V; 1cycle: connect to a 1500cc pneumatic cylinder on 4s, off4s)						
Working Environment		-20~60°C,80%RH						

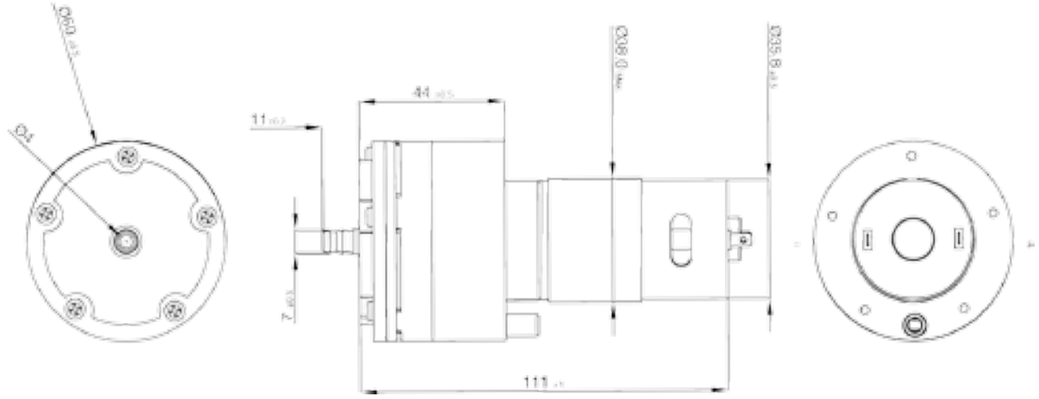

PUMP MOTOR | ∅27

Water Type

	unit	TPW2761011	TPW2761007	TPW2700001	TPW2761035			
Parameters								
Nominal Voltage	V	12	12	12	3			
Medium		Water	Water	Water	Water			
Free Flow	ml/min	870	1000	1500	440			
Max. Current	mA	500	600	750	320			
Max. Pressure	Bar	>2	>2	>2	-			
Noise	dB	<60	<65	<65	<60			
Others								
Life Test		6000 times (DC3/12V; 1cycle: on 2min, off 1min)						
Working Environment		0~50°C, 75%RH						

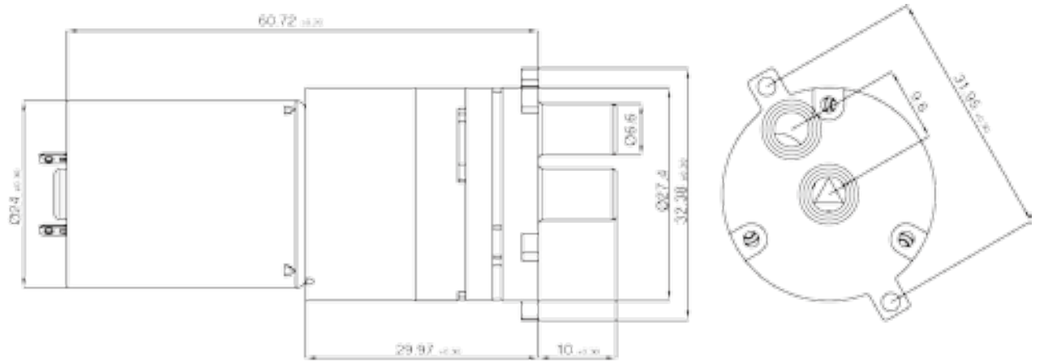

PUMP MOTOR | ∅27

Water Type

	unit	TPW2761012	TPM2761017					
Parameters								
Nominal Voltage	V	12	18					
Medium		Water	Water					
Free Flow	ml/min	>1000	410					
Max. Current	mA	<1000	<600					
Max. Pressure	Bar	>2	-					
Noise	dB	<65	<65					
Others								
Life Test		10,000 times (DC12V/18V; 1cycle: on 1min, off 1min)						
Working Environment		0~95°C,80%RH						

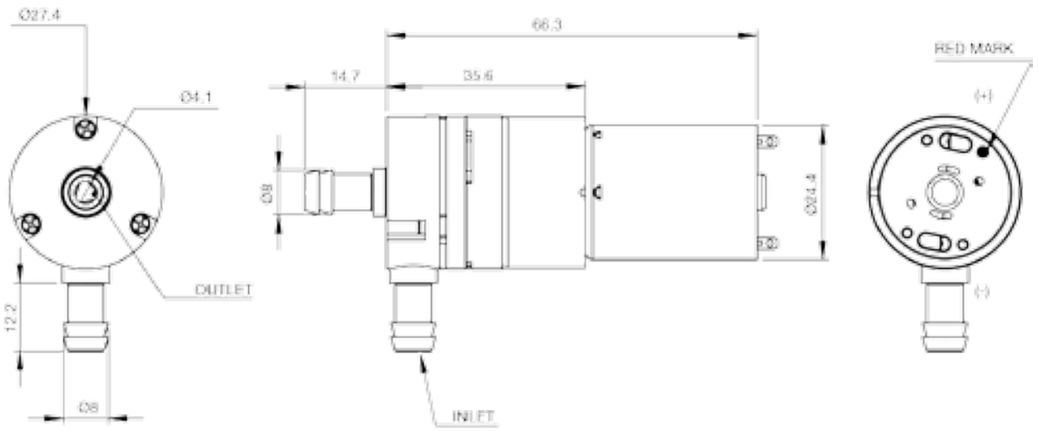

PUMP MOTOR | ∅27

Water Type

	unit	TPW2761015	TPW2761016	TPW2761025	TPW27610024	TPW2761001	TPW2761019	
Parameters								
Nominal Voltage	V	12	12	12	12	24	24	
Medium		Water	Water	Water	Water	Water	Water	
Free Flow	ml/min	620	450	620	700	620	700	
Max. Current	mA	280	200	280	350	150	180	
Max. Pressure	Bar	>2	>0.5	>2	>2.5	>2	>2.5	
Noise	dB	<55	<55	<55	<60	<55	<60	
Others								
Life Test		10,000 times (DC12V / 24V; 1cycle: on 2min, off 1min)						
Working Environment		0~95°C, 75%RH						

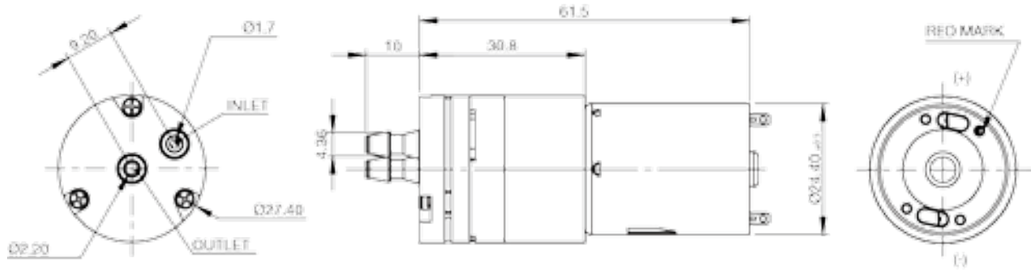

PERISTALTIC PUMP MOTOR | ∅28

Water Type

	unit	TPV2861001						
Parameters								
Nominal Voltage	V	6						
Medium		Water						
Free Flow	ml/min	80~110						
Max. Current	mA	<500						
Max. Pressure	Bar	>1						
Noise	dB	<60						
Others								
Life Test		200,000 times (DC6V; 1cycle: on 3s, off4s)						
Working Environment		0~60°C,80%RH						

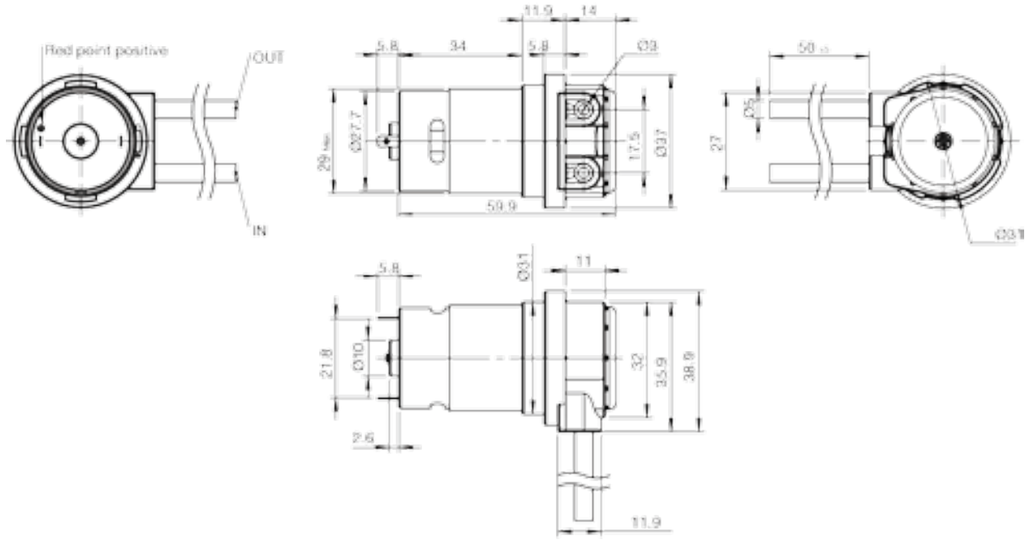

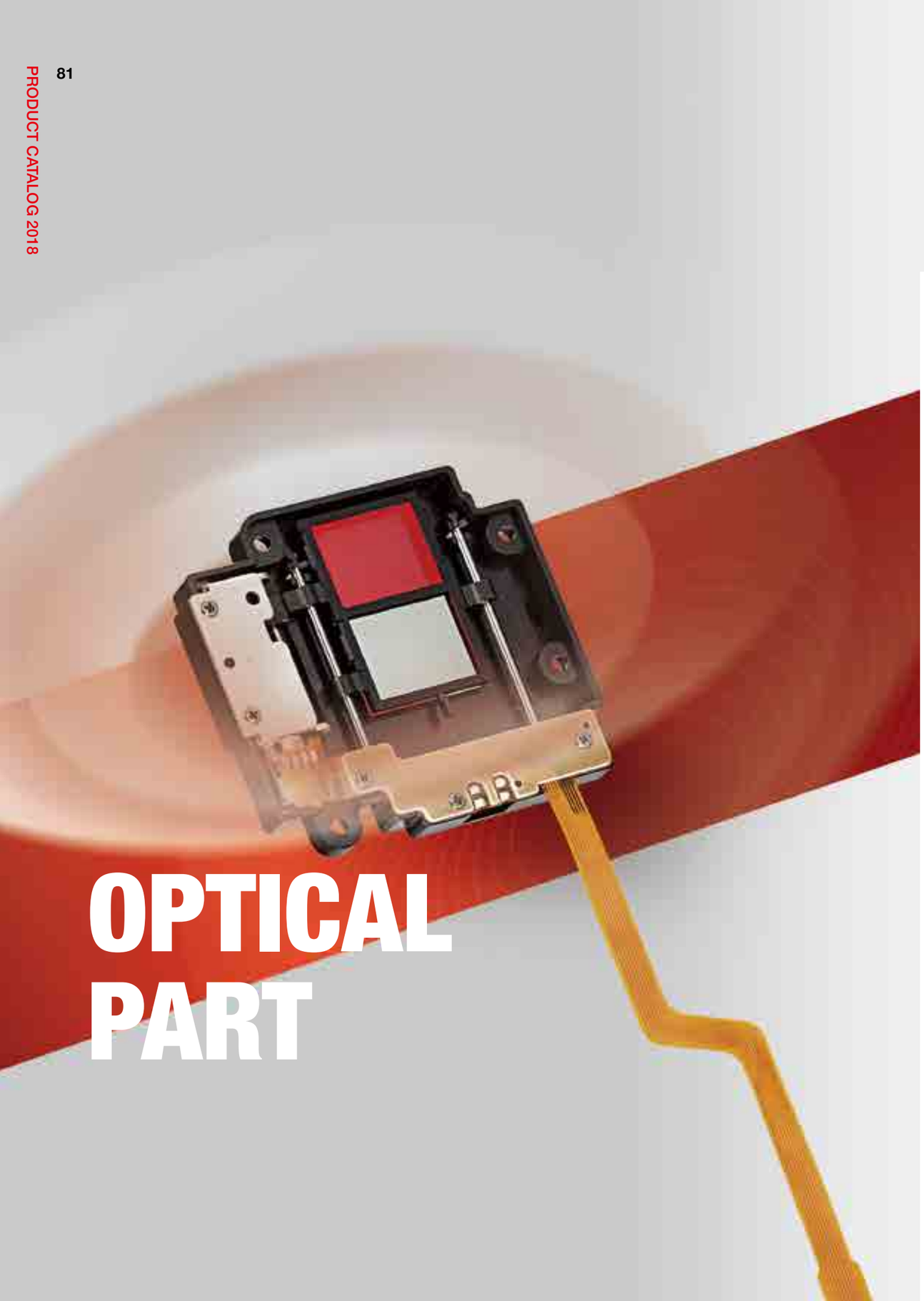

OPTICAL PART

OPTICAL PART

IRIS

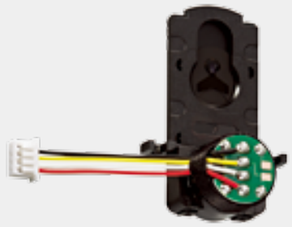

	unit	PSI0700032	PSI32000041	PSI1800004				
		SA23210	SA23141	SA23224X				
Electrical Characteristic								
Max. Open Voltage	V	3.0	3.0	3.5				
Min. Close Voltage	V	0.5	0.5	0.5				
Driving Voltage	V	6	6	6				
Braking Resistance	Ω	190	190	190				
Driving Resistance	Ω	465	560	465				
Main Characteristic								
Engine Type		Solenoid	Solenoid	Solenoid				
Driving Mode		-	-	-				
Aperture Diameter	mm	6.7	7.0	20.1				

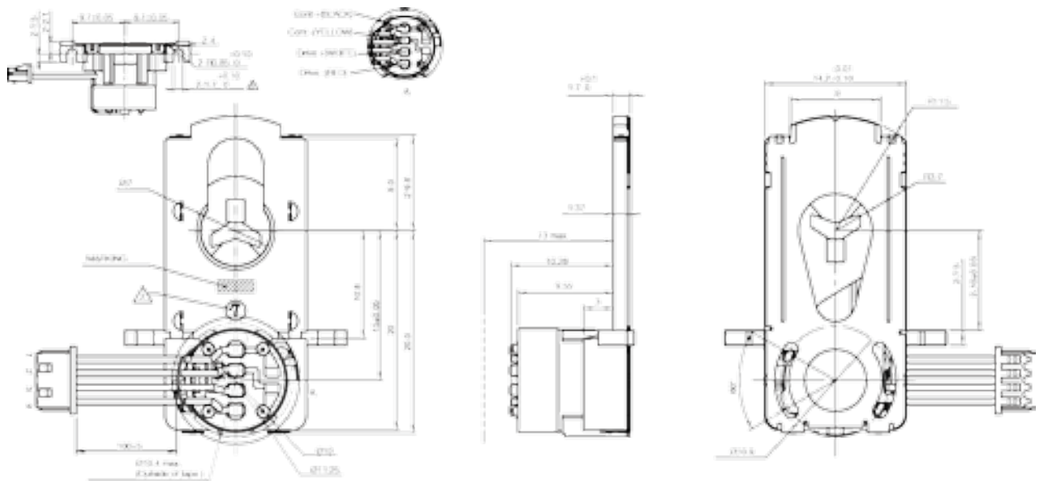

OPTICAL PART

Precise-IRIS

	unit	AON1100001	AON1600001	AON0900009				
		PI020	PI021	PI031				
Electrical Characteristic								
Voltage	V	3.3	3.3	3.3				
Driving Voltage	V	3.3	3.3	3.3				
Resistance	Ω	30	30	28.5				
Main Characteristic								
Engine Type		Solenoid	Stepping Motor	Solenoid				
Driving Mode		2-2	2-2	2-2				
Aperture Diameter	mm	11.4	16.0	8.0				

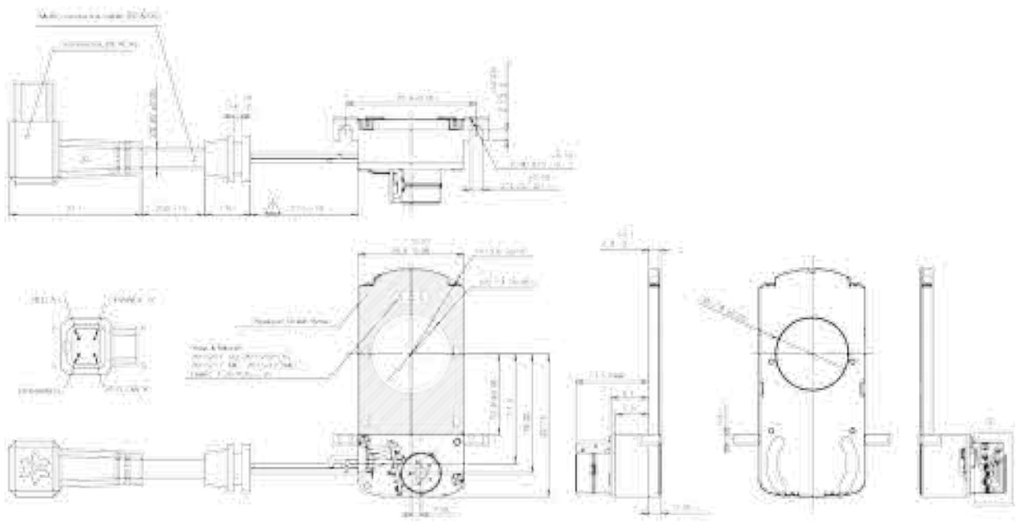

OPTICAL PART

IR-Cut

	unit	AOF0700029	AOF0800019	AOF0800093	AOF0800119	AOF0800127	AOF0800129	PSR0500010
		PE317	PE148	PE246	PE286	PE298	PE299	PE004
Electrical Characteristic								
Voltage	V	3.5~5	3.6	3.6~5.0	3.5~5.0	3.6~5.0	3.0~4.5	3.6~5.0
Driving Voltage	V	3.3	3.3	3.3	3.3	3.3	3.3	3.3
Resistance	Ω	25	25	25	25	25	20	25
Main Characteristic								
Engine Type		Solenoid	Solenoid	Solenoid	Solenoid	Solenoid	Solenoid	Solenoid
Driving Mode		-	-	-	-	-	-	-
Aperture Diameter	mm	7*7	8*8	8*8	7*7	8*8	8*8	8*8

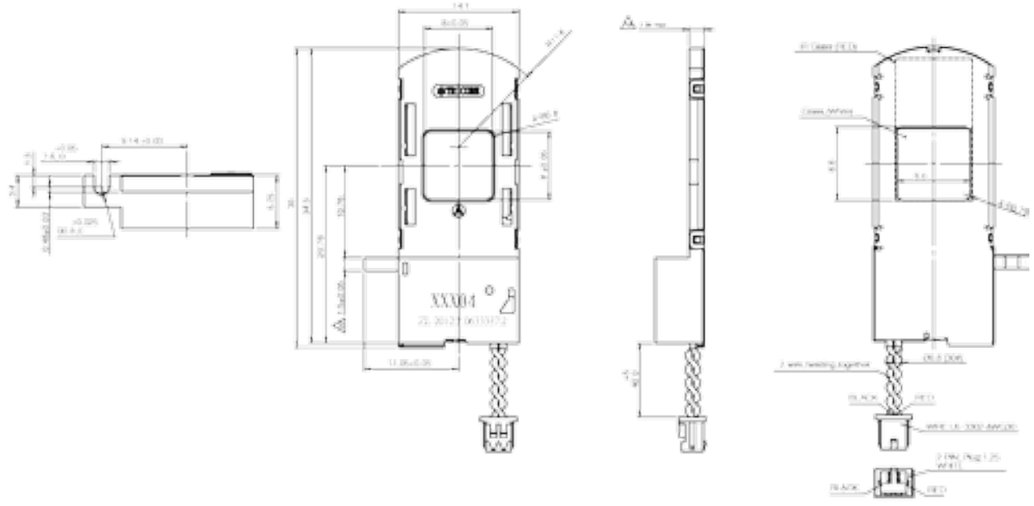

OPTICAL PART

IR-Cut

(PLUG-IN TYPE)

	unit	PSR3200011	PSR3000017
		PE037	PE053
Electrical Characteristic			
Voltage	V	3.0~5.0	3.5
Driving Voltage	V	3.3	3.3
Resistance	Ω	25	25
Main Characteristic			
Engine Type		Solenoid	Solenoid
Driving Mode		-	-
Aperture Diameter	mm	7.2	6.5

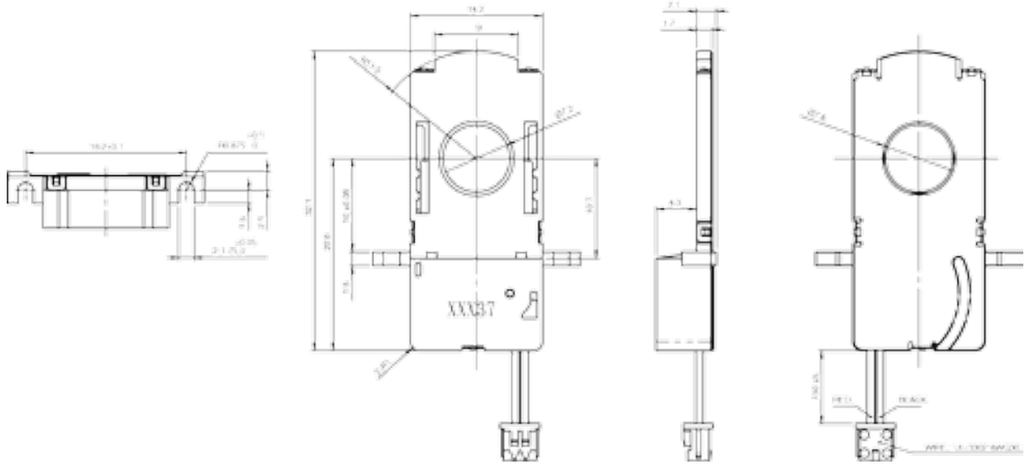

OPTICAL PART

IR-Cut

(SWING TYPE)

	unit	AOF0700004	AOF0800100
		PE127	PE258
Electrical Characteristic			
Voltage	V	4.0	3.0
Driving Voltage	V	3.3	-
Resistance	Ω	25	15
Main Characteristic			
Engine Type		Solenoid	Solenoid
Driving Mode		-	-
Aperture Diameter	mm	6.8	6.8

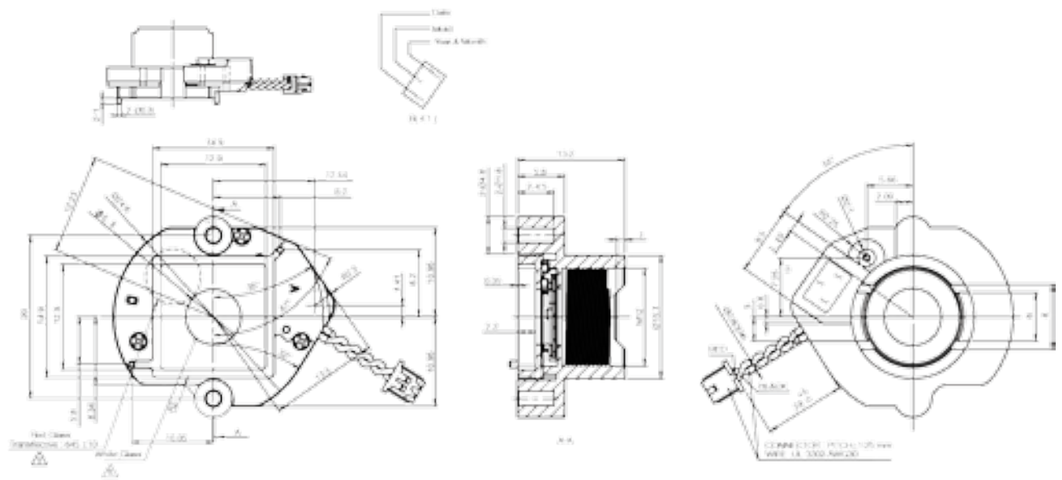

OPTICAL PART

IR-Cut

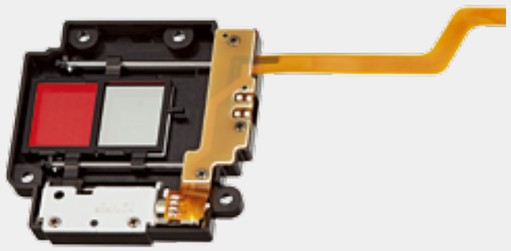

	unit	AOF1400001						
		PE232						
Electrical Characteristic								
Voltage	V	3.0~5.0						
Driving Voltage	V	3.3						
Resistance	Ω	20						
Main Characteristic								
Engine Type		Stepping Motor						
Driving Mode		2-2						
Aperture Diameter	mm	12.4*15.8						

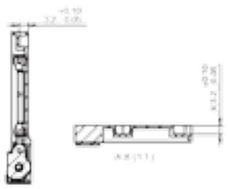

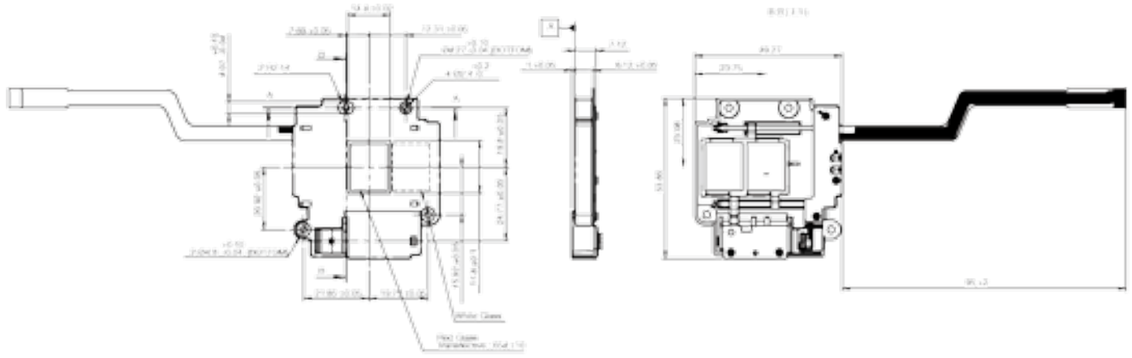

OPTICAL PART

IR-Cut

	unit	PSR3200008						
		PE022						
Electrical Characteristic								
Voltage	V	6						
Driving Voltage	V	-						
Resistance	Ω	60						
Main Characteristic								
Engine Type		Solenoid						
Driving Mode		-						
Aperture Diameter	mm	6.6						

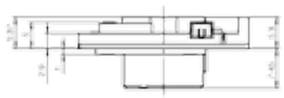

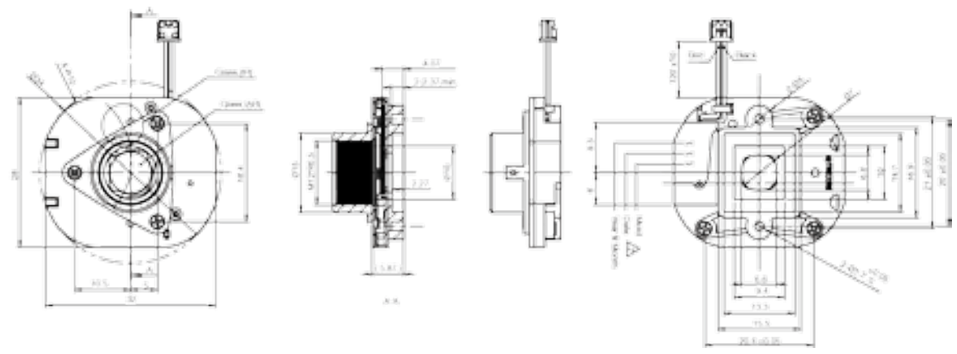

OPTICAL PART

IRIS & IR-Cut

(TWIN ENGINE TYPE)

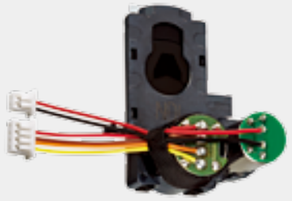

	unit	PSI4400010	PSI1300005	PSI0800029
		DE018	DE104	DG005X
Electrical Characteristic				
Max. Open Voltage	V	3.0	3.0	3.0
Min. Close Voltage	V	0.5	0.5	0.5
Driving Voltage	V	6	6	6
Braking Resistance	Ω	190	120	190
Driving Resistance	Ω	855	120	855
Main Characteristic				
Engine Type		Solenoid	Solenoid	Solenoid
Driving Mode		-	-	-
Aperture Diameter	mm	7.0	13.6	8.0

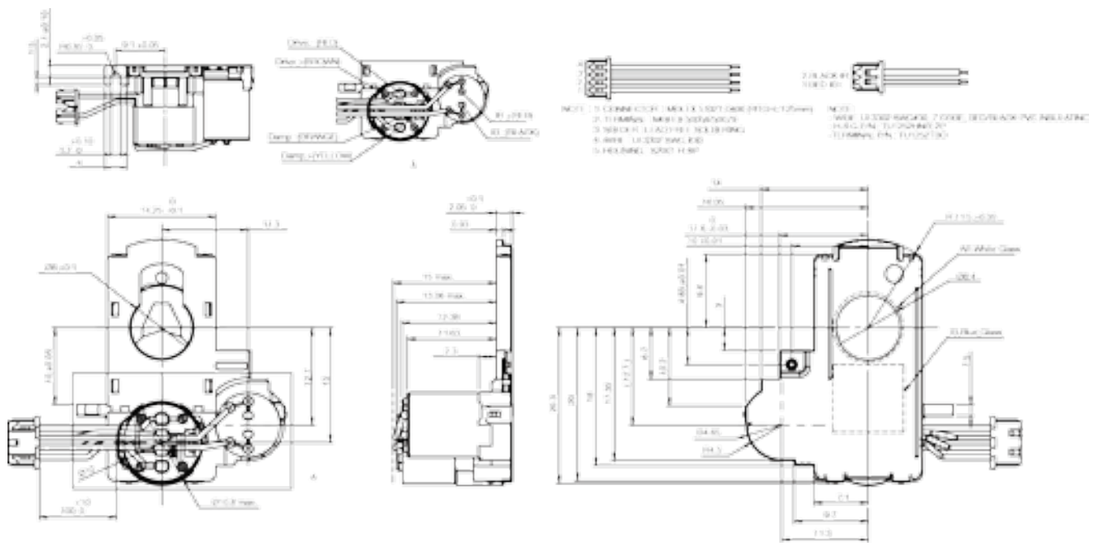

OPTICAL PART

IRIS & IR-Cut

(TWIN ENGINE TYPE)

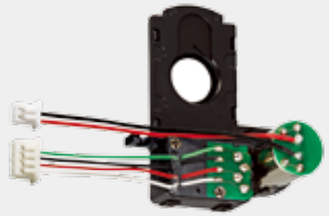

	unit	AON0800007	AON0800008	AON0800010
		PI032X	PI033X	PI040X
Electrical Characteristic				
Voltage	V	3.3	3.3	3.3
Driving Voltage	V	3.3	3.3	3.3
Resistance	Ω	28.5	28.5	28.5
Main Characteristic				
Engine Type		Solenoid	Solenoid	Solenoid
Driving Mode		2-2	2-2	2-2
Aperture Diameter	mm	8.0	8.0	6.9

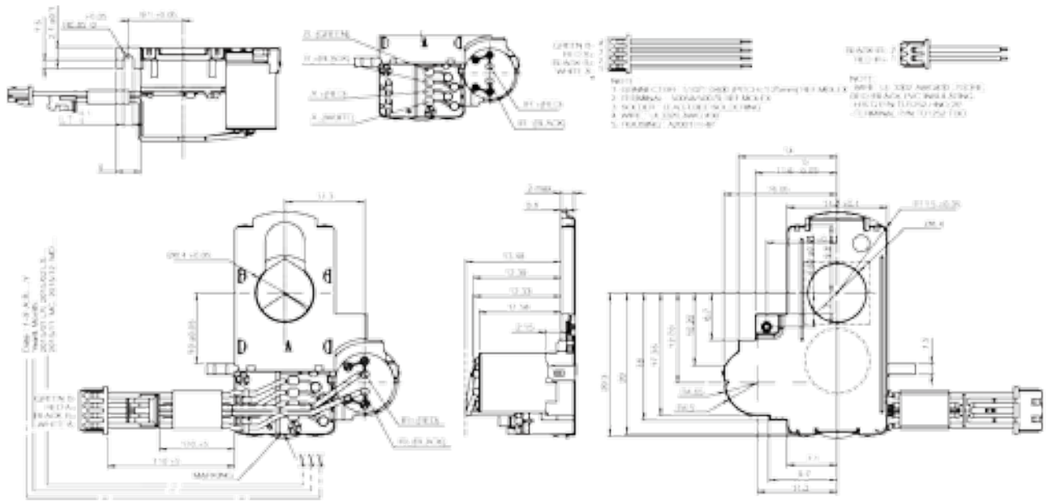

OPTICAL PART

Thermal Shutter

	unit	AHB1600001	AHB1200004					
		SU040	SU055					
Electrical Characteristic								
Voltage	V	3.3	3.3					
Resistance	Ω	13	13					
Main Characteristic								
Motor Type		Rotary Solenoid	Rotary Solenoid					
Driving Mode		-	-					
Shutter Speed	ms	40	40					
Aperture Diameter	mm	13.0*15.6	11.7*9.75					

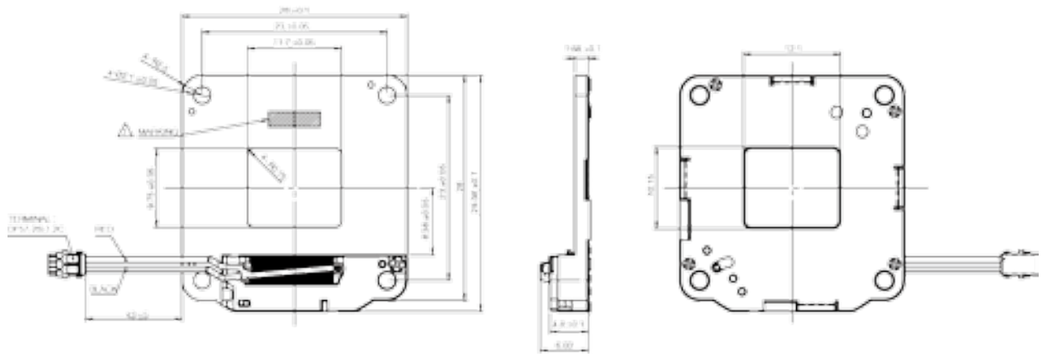

AUTOMOTIVE PART

AUTOMOTIVE PART | Axial

Stepping Motor

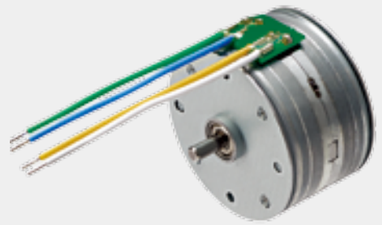

	unit	SRA3516001	SRA3516002	SRA3519001	SRA3519002	SRA4222001		
Electrical Characteristic								
Nominal Voltage	V	12	12	12.8	12.8	24		
Operating Range	V	9~16	9~16	9~16	9~16	22~26		
Coil Resistance	Ω	10	6	8	8	12		
Storage Temperature Range	°C	-40~120	-40~120	-40~120	-40~120	-25~80		
Operating Temperature Range	°C	-40~105	-40~105	-40~105	-40~105	0~50		
Step Angle	°/Step	3.75	7.5	15	15	11.25		
Nominal Frequency	PPS	600	660	300	300	300		
Max. Starting Frequency	PPS	-	-	450	450	450		
Output Force	kg	>7.0	>180	-	-	-		
Pull-in Torque	mNm	-	17.65	14.70	14.70	44.12		
Pull-out Torque	mNm	-	22.55	17.65	-	63.74		

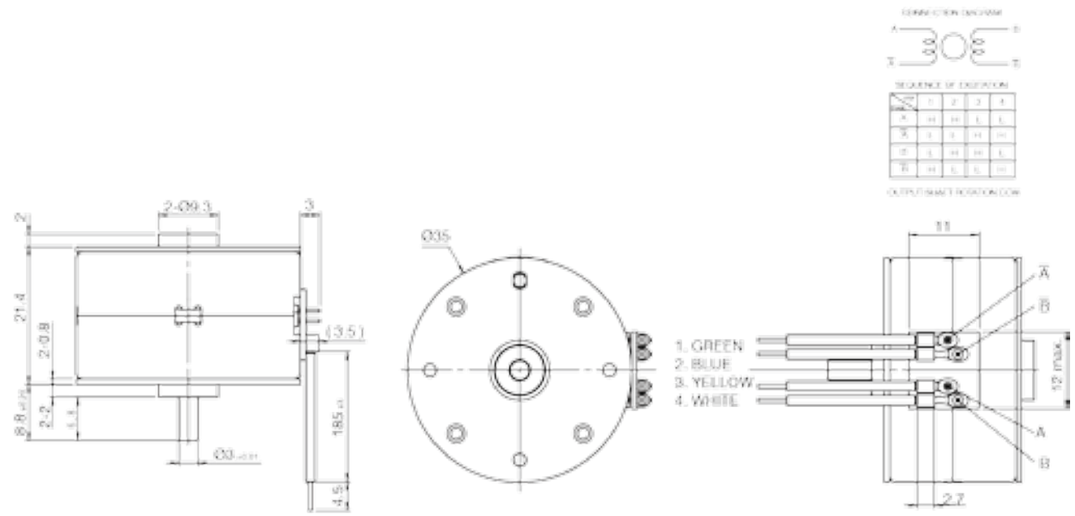

AUTOMOTIVE PART | Axial

Stepping Motor

	unit	SRA4226001
Electrical Characteristic		
Nominal Voltage	V	12.8
Operating Range	V	9~16
Coil Resistance	Ω	29
Storage Temperature Range	°C	-40~120
Operating Temperature Range	°C	-40~105
Step Angle	°/Step	11.25
Nominal Frequency	PPS	160
Max. Starting Frequency	PPS	-
Push Force	kg	2.0

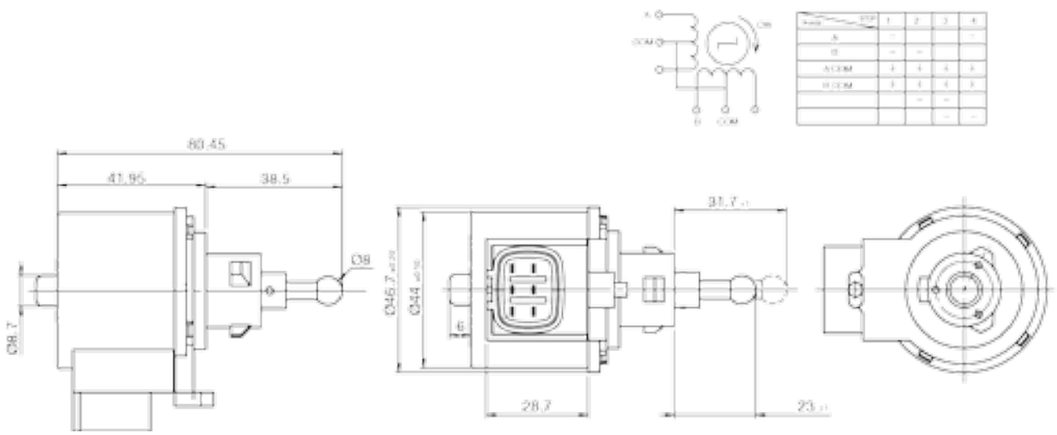

AUTOMOTIVE PART | Pinion Gear

Stepping Motor

	unit	SRG3519002	SRG3519005
Electrical Characteristic			
Nominal Voltage	V	24	12
Operating Range	V	-	9~16
Coil Resistance	Ω	38	8
Storage Temperature Range	°C	-10~60	-40~120
Operating Temperature Range	°C	-20~70	-40~100
Step Angle	°/Step	15	15
Nominal Frequency	PPS	250	300
Max. Starting Frequency	PPS	400	450
Push Force	kg	-	-

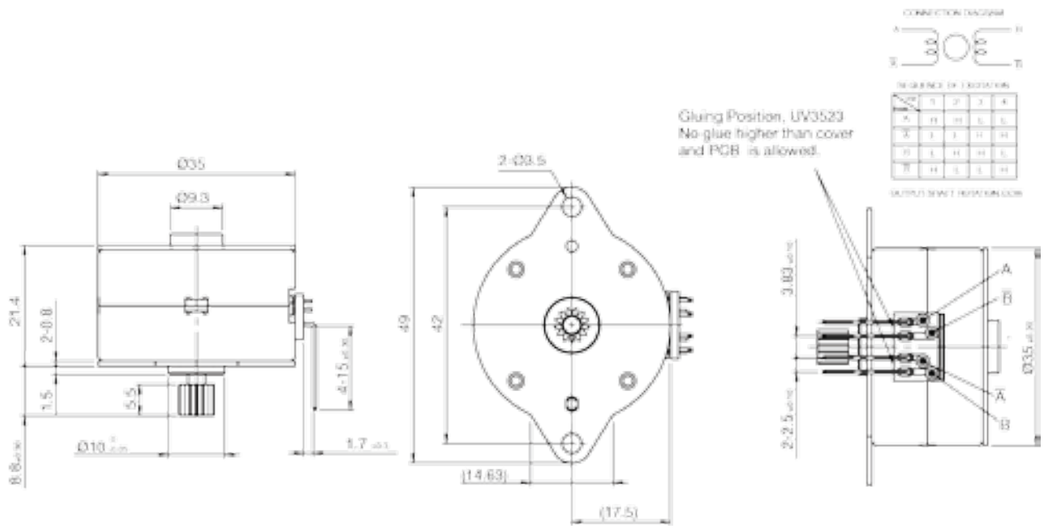

AUTOMOTIVE PART | Leadscrew

Stepping Motor

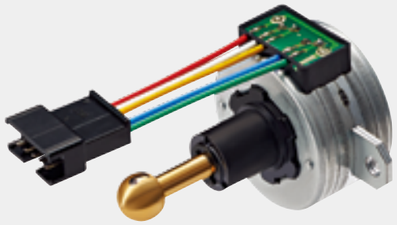

	unit	SRL3519014	SRL3519018
Electrical Characteristic			
Nominal Voltage	V	12	12
Operating Range	V	9~16	9~16
Coil Resistance	Ω	8	8
Storage Temperature Range	°C	-40~120	-40~120
Operating Temperature Range	°C	-40~105	-40~105
Step Angle	°/Step	15	15
Nominal Frequency	PPS	400	400
Max. Starting Frequency	PPS	400	400
Push Force	kg	5.0	5.0

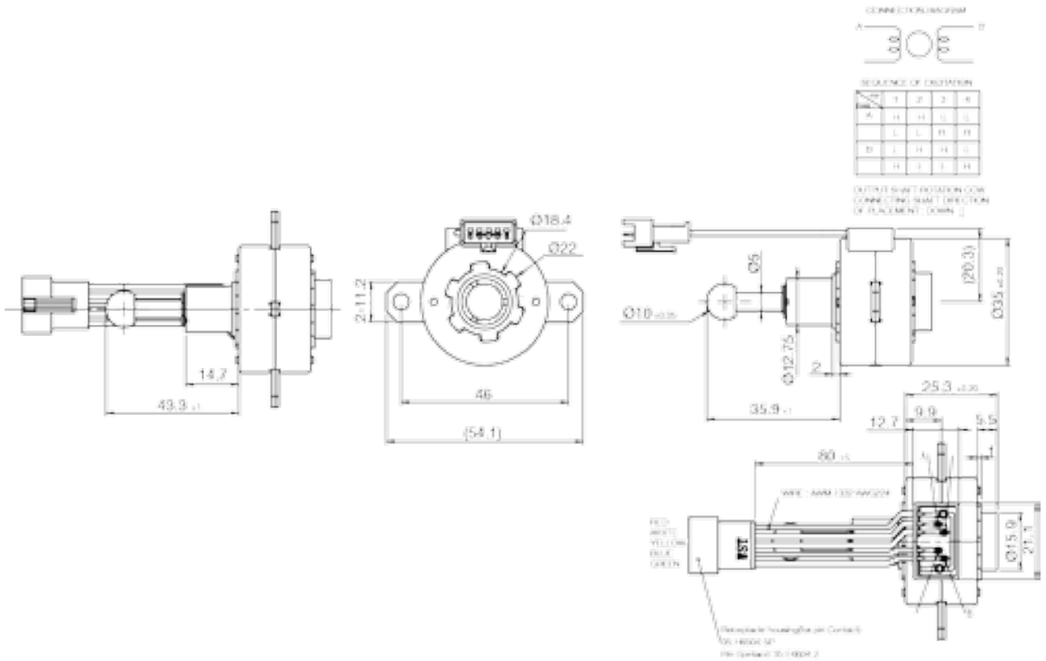

Stepping Motor

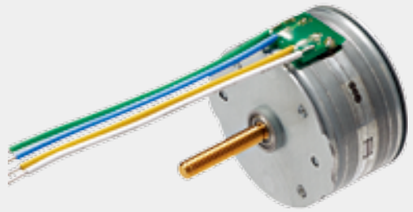

	unit	SRL3524005
Electrical Characteristic		
Nominal Voltage	V	12.8
Operating Range	V	9~16
Coil Resistance	Ω	8
Storage Temperature Range	°C	-40~120
Operating Temperature Range	°C	-40~105
Step Angle	°/Step	15
Nominal Frequency	PPS	300
Max. Starting Frequency	PPS	450
Pull-in Torque	mNm	14.70

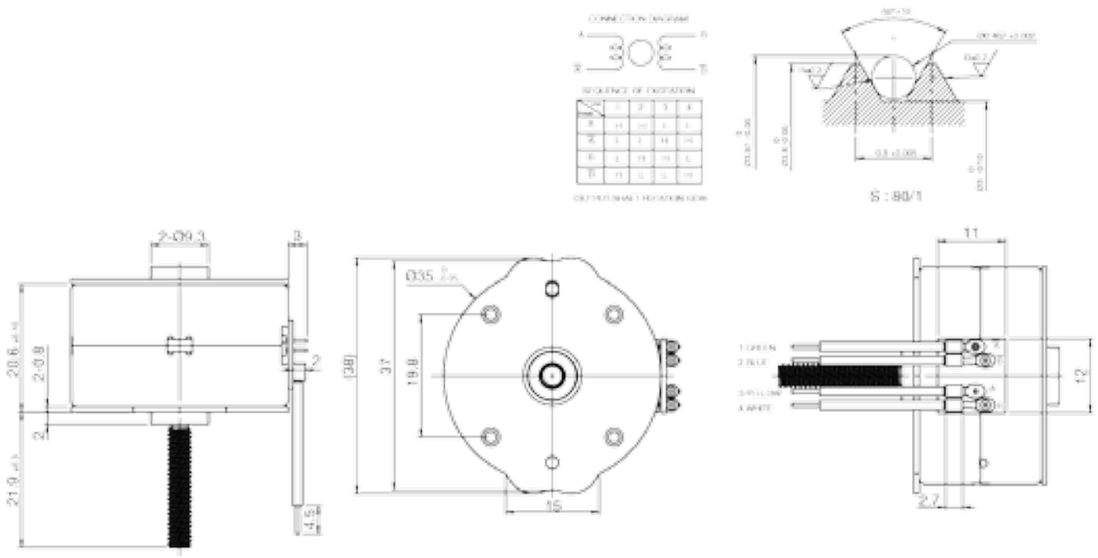

AUTOMOTIVE PART | Leadscrew

Stepping Motor

	unit	SRL3524001	SRL3524003	SRL3524007	SRL3524013	SRL3524014	SRL3524015
Electrical Characteristic							
Nominal Voltage	V	12.8	12.0	12.8	12.8	12.8	12.8
Operating Range	V	9.0~16.0	9.0~16.0	9.0~16.0	9.0~16.0	9.0~16.0	9.0~16.0
Storage Temperature Range	°C	-40~120	-25~100	-40~120	-40~120	-40~120	-40~120
Operating Temperature Range	°C	-40~105	-25~85	-40~105	-40~105	-40~105	-40~105
Step Angle	°/Step	15	15	15	15	15	15
Nominal Frequency	PPS	400	450	400	400	400	400
Max. Starting Frequency	PPS	400	450	400	400	400	400
Push Force	kg	3.0	10.0	3.0	3.0	3.0	3.0

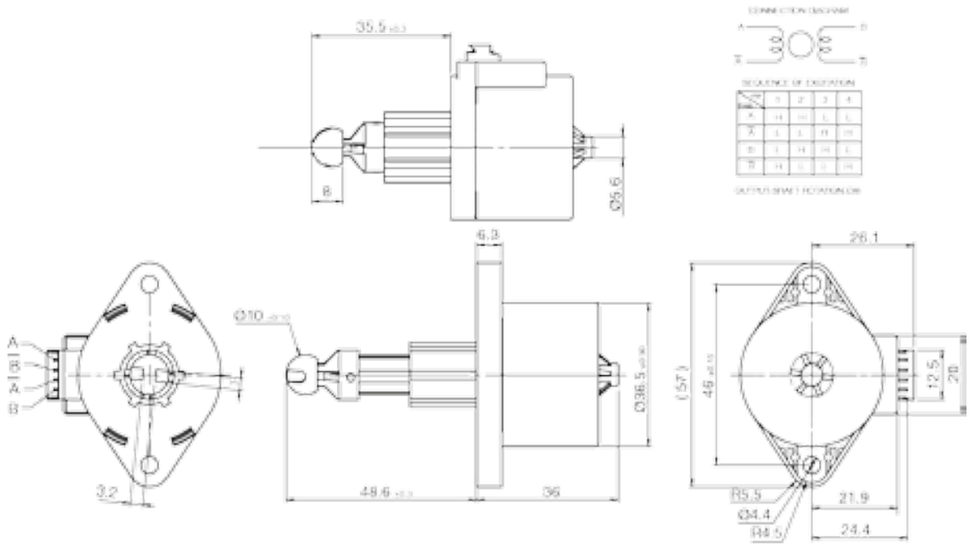

AUTOMOTIVE PART | Leadscrew

Stepping Motor

	unit	SRL3524017	SRL3524023	SRL4233001
Electrical Characteristic				
Nominal Voltage	V	12.8	12.8	12.8
Operating Range	V	9.0~16.0	9.0~16.0	9.0~16.0
Storage Temperature Range	°C	-40~120	-40~120	-40~120
Operating Temperature Range	°C	-40~105	-40~105	-40~105
Step Angle	°/Step	15	15	11.25
Nominal Frequency	PPS	300	400	160
Max. Starting Frequency	PPS	400	400	160
Push Force	kg	3.0	3.0	2.0

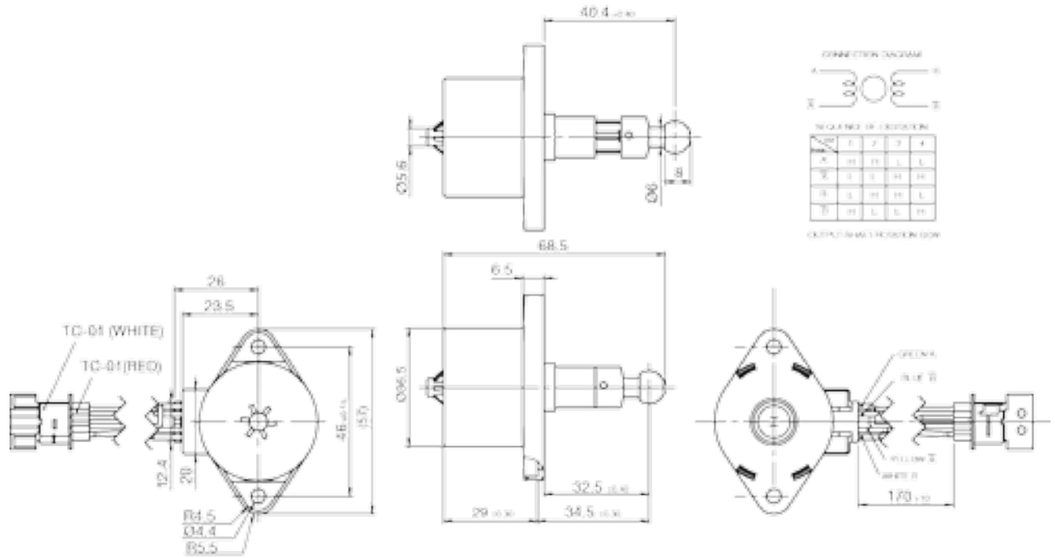

TRICORE INNOVATION

Gear Coreless Motor

13mm | Planetary Gearhead

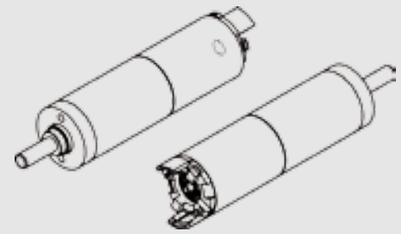

	unit	BEG1322001
Standard Operating Conditions		
Nominal Voltage	V	6.0
Operating Range	V	6.0~8.4
Operating Temperature Range	°C	-10~+60
Storage Temperature Range	°C	-20~+80
Direction of Rotation		CW&CCW
Motor Position		All Direction
Electrical Characteristic		
No-Load Current	mA	40
No-Load Speed	rpm	135
Stall Torque	mNm	63.74
Starting Current	mA	500
Coreless Motor Electrical Characteristic		
No-Load Current	mA	15
No-Load Speed	rpm	8500
Starting Voltage	V	1.0
Starting Current	mA	200
Rotor Resistance	Ω	28
Insulation Resistance	MΩ/min	1

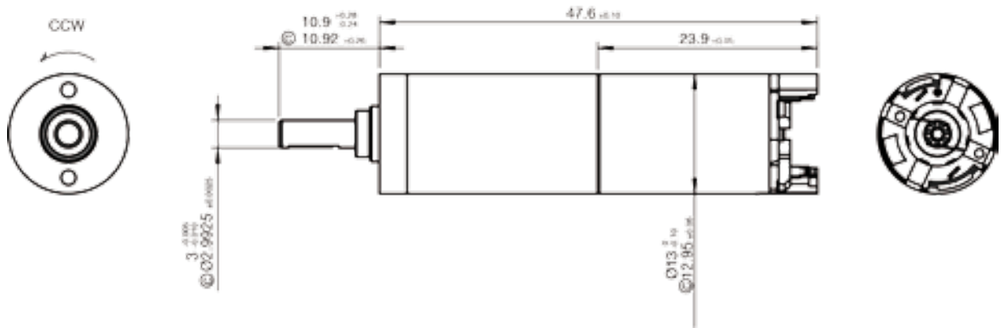

TRICORE INNOVATION

Gear Coreless Motor

17mm | Metal Gearhead

Application I Smart Lock

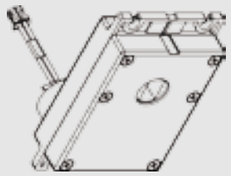

	unit	BCP1718001
Standard Operating Conditions		
Nominal Voltage	V	6.0
Operating Range	V	5.5~6.5
Operating Temperature Range	°C	-10~+60
Storage Temperature Range	°C	-20~+80
Direction of Rotation		CW&CCW
Motor Position		All Direction
Electrical Characteristic		
No-Load Current	mA	150
No-Load Speed	rpm	67.5
Stall Torque	mNm	1274.86
Starting Voltage	V	1.0
Starting Current	mA	3800
Reduction Ratio		1:281
Mechanical Noise	dB	60

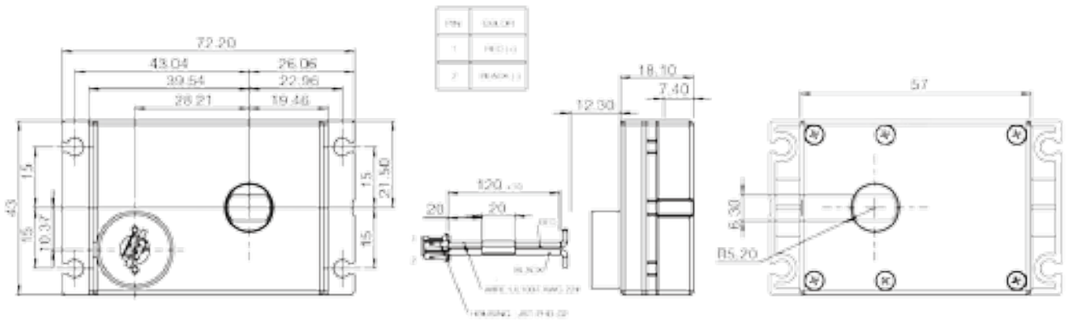

TRICORE INNOVATION

Servo Gear Motor

12mm | Metal Gearhead

Application I Smart Lock

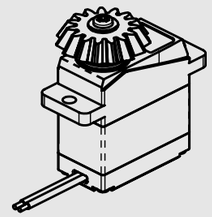

	unit	HQA0324001	
Standard Operating Conditions			
Nominal Voltage	V	4.8	6.0
Operating Range	V	4.8~6.0	4.8~6.0
Operating Temperature Range	°C	-20~+60	-20~+60
Storage Temperature Range	°C	-10~+50	-10~+50
Electrical Characteristic			
No-Load Current	mA	60	80
No-Load Speed	rpm	77	100
Stall Torque	mNm	0.17	0.21
Stall Current	mA	550	700
Limit Angle	°	360	360
Reduction Ratio		1:150	1:150
Weight	g	19	19

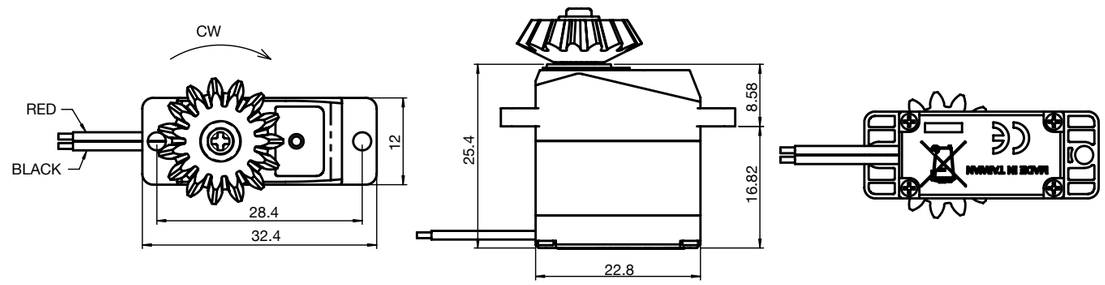

TRICORE INNOVATION

Solenoid

IS19 series

Application I Blood Pressure Meter

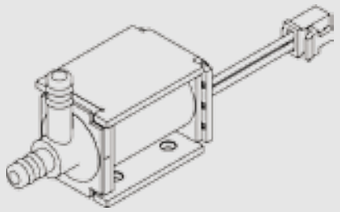

	unit	TVC0300001
Parameters		
Nominal Voltage	V	24
Medium		Air
Resistance	Ω	210
Min. Starting Voltage	V	≤21.6
Exhaust Velocity		Reduce 300 mmHg to 15mmHg at 500 cc of pneumatic cylinder : ≤ 6.0s
Others		
Life Test		300,000 times (DC24V; 1cycle: on 0.5s, off 0.5s)
Working Environment		0~45°C, 40-80%RH

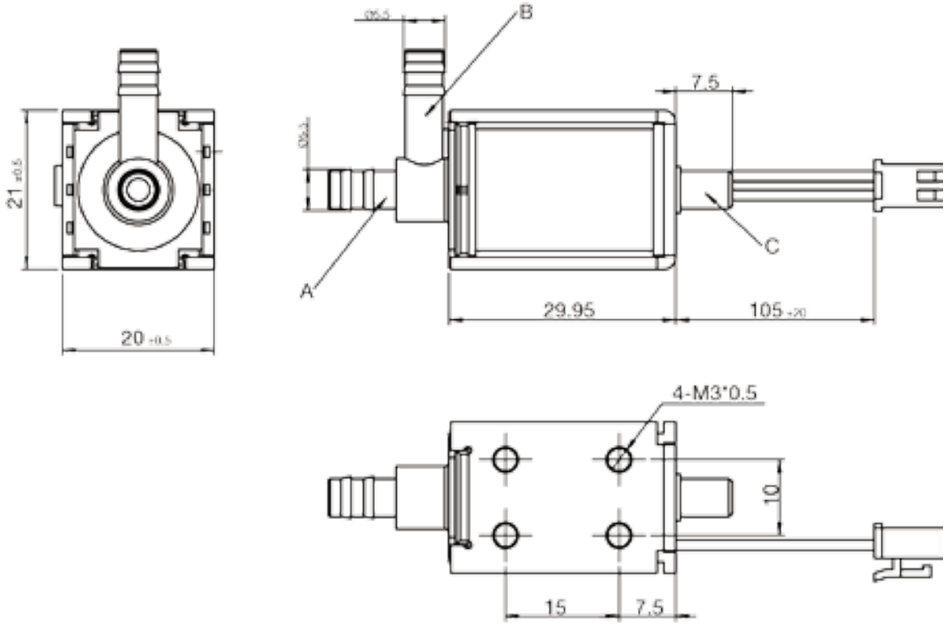

TRICORE INNOVATION

Solenoid

Application I Automotive

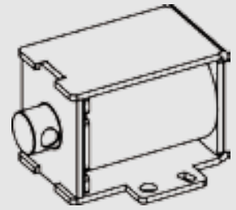

	unit	PSO3100001
Standard Operating Conditions		
Nominal Voltage	V	12
Operating Range	V	10~15
Operating Temperature Range	°C	-40~135
Storage Temperature Range	°C	-40~135
Operating Stroke	mm	4
Resistance	Ω	22
Insulation Resistance	Ω/min	10M
Withstand Voltage Test	AC/V	500
Attraction	gf/min	250

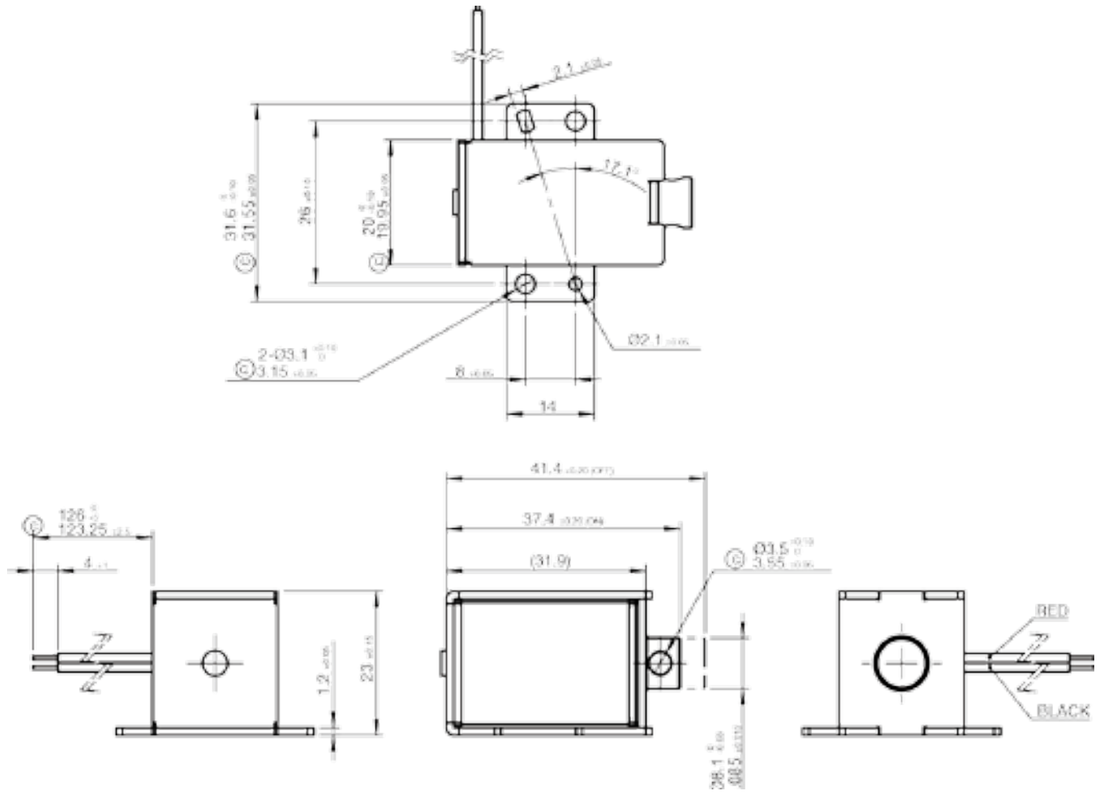

TRICORE

TRICORE INNOVATION

AFS Series
(Adaptive Front-lighting System)

Application I Automotive

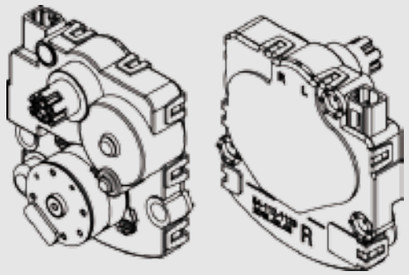

	unit	AFS3004005	AFS3004006
Standard Operating Conditions			
Nominal Voltage	V	12	12
No. of Phase	Phase	2	2
Max. Starting Frequency	pps	250	250
Operating Temperature Range	°C	-40~80	-40~80
Storage Temperature Range	°C	-40~80	-40~80
Operating Angle	°	34	34
Resolution of Operating Angle	°/STEP	1/10	1/10
Torque	mNm	980.66	980.66
Dielectric Strength	V	200/AC	200/AC
Insulation Resistance	Ω	1M	1M
Mechanical Noise	dB	65	65

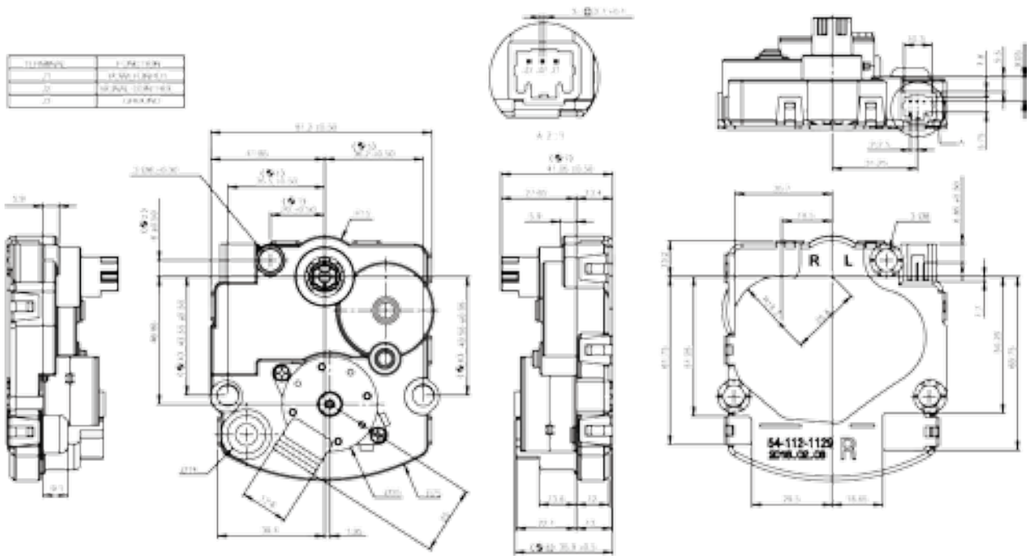

TRICORE INNOVATION

AFS Series
(Adaptive Front-lighting System)

Application I Automotive

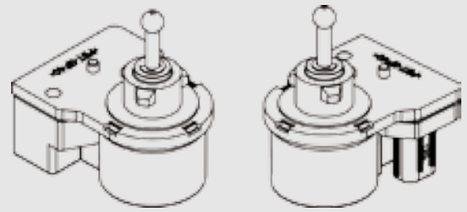

	unit	AFS3005008
Standard Operating Conditions		
Nominal Voltage	V	31
Push Force	Kg	>2
Vehicle Bus		LIN Bus
Operating Stroke	mm	10
Dielectric Strength	V	200/AC
Insulation Resistance	Ω/min	1M
Axial Resistance to Assembly of Refelector	Kg	25
Max. Assembly Speed	mm/min	300

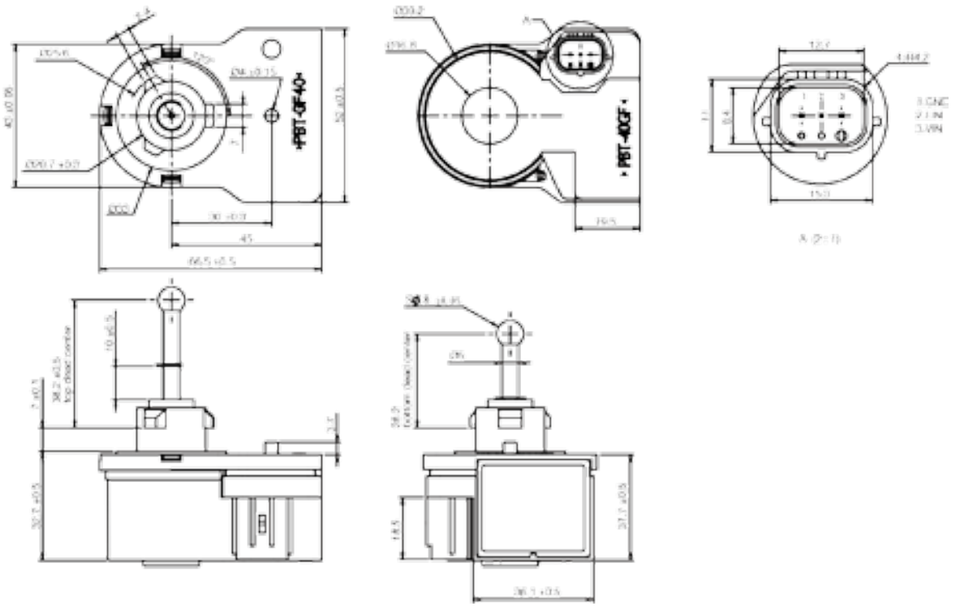

Quality Certification

In order to make quality the core of our management, we consider the customer's focus as the core in improving the quality and efficiency in our work performance. To sustain the insistence of quality, TRICORE's Quality Control department applies a variety of exclusive measuring work stations as an educational training platform. With this platform, we constantly carry out intensive educational training programs and assessments to nurture creative technical personnel and promote analysts' ability in product measurement in order to achieve superior quality, meeting and exceeding customers' expectations on products' quality requirements.

1999	We granted ISO9002:1999 international quality system certification.
2002	Passed the ISO9001 in 2002.
2003	ISO14001 in 2003. We granted the SONY GP certification in 2003.
2004	We also granted OHSAS18001 certification in 2004.
2006	TS16949 certification in 2006.
2013	QC8000 certification in 2013.
2018	IATF 16949 certification in 2018.

ISO13485 is under applying.